Fire Safety Analysis Manual for LP-Gas Storage Facilities

Authors:

Phani K. Raj, Ph.D., Technology and Management Systems, Inc.
Theodore C. Lemoff, PE, National Fire Protection Association

Developed by the National Fire Protection Association and the National Propane Gas Association

Funded by a Propane Education and Research Council Grant

The material and other information included in this manual are intended to provide general guidance only on the subject matter addressed by the manual. It is not intended to be a substitute for the personal instruction, guidance and advice of a professional with training and experience in the safe and proper use of propane.

The official position of the NFPA on all aspects propane storage facility safety is in NFPA 58, the *Liquefied Petroleum Gas Code*. This manual is not intended to replace NFPA 58.

Users of this manual should consult the law of their individual jurisdictions for codes, standards and legal requirements applicable to them. This manual merely suggests methods which the user may find useful in implementing applicable codes, standards and legal requirements. This manual is not intended nor should it be construed to (1) set forth procedures which are the general custom or practice in the propane industry; (2) to establish the legal standards of care owed by propane distributors to their customers; or (3) to prevent the user from using different methods to implement applicable codes, standards or legal requirements.

The Propane Education & Research Council, the National Propane Gas Association and the National Fire Protection Association disclaim any and all liability for losses or damages arising from, or caused in whole or in part upon, use of this manual or the material or other information contained in this manual.

August 2004

2nd Printing March 2005

Dedication

This Manual is dedicated to Jim Hurley of Eastern Propane Gas, Inc located in Rochester, NH. During his 15 years with Eastern, and his previous experience in technical and non-technical aspects of the industry, he gained an awareness of the challenges facing propane marketers.

Jim recognized that marketers needed help in complying with the requirement of a written Fire Safety Analysis for all facilities in the 2001 edition on NFPA 58.

He discussed this need with the principal author, Phani Raj, who agreed with the need, and joined with NFPA and NPGA in requesting that the project be funded.

While Jim did not play an active part in the development of the Manual, his recognition of the need made it happen.

Acknowledgments

This project to develop a Fire Safety Analysis (FSA) manual was undertaken to fulfill a need for an easily useable and simple aid for the members of propane industry to fulfill their obligations under the NFPA 58 (2001 edition) requirements to develop a written FSA. The project was funded by the Propane Education and Research Council through the National Propane Gas Association (NPGA). The National Fire Protection Association (NFPA) was the principal contractor. Technology & Management Systems, Inc. (TMS), developed the technical analyses and several chapters of the manual, as a subcontractor to NFPA.

Mr. Theodore C. Lemoff, Principal Gases Engineer, was the principal investigator at NFPA. Dr. Phani K. Raj was the principal investigator and analyst at TMS. Mr. Bruce Swiecicki, P.E., Senior Technical Advisor at NPGA, served as a staff technical reviewer. Ms. Susan J. Spear, Vice President, Education & Training, NPGA served as the project manager.

NPGA assembled an Advisory Committee consisting of representatives from the propane industry, a Fire Department of a major city in the US and a Fire Protection Engineer. The Committee provided technical inputs and guidance to the project team on industry safety practices, types of information that an authority having jurisdiction and emergency responders would want to see in an FSA, an insight into the levels of understanding of various issues related to FSA in the industry, etc. The Advisory Committee set not only the direction of the project but made policy decisions related to the scope of FSA manual. Except for the contractors, every member of the Advisory Committee had a vote and many decisions were made on the basis of a Committee vote. The **Advisory Committee** consisted of the following (voting) members.

1	Michael Merrill **(Chairman)**	Suburban Propane LP	Whippany, NJ
2	Mr. Greg Benton	Georgia Gas Distributors	Atlanta, GA
3	Mr. Billy Cox	O'Nealgas Inc.	Choudrant, LA
4	Mr. James Howe	Howe Engineers, Inc.	West Falmouth, MA
5	Mr. Jerry Lucas	Heritage Propane Partners, LP	Sallisaw, OK
6	Mr. Rob Scott	Scott & Associates	Kingsburg, CA
7	Mr. Cliff Slisz	Ferrellgas	Liberty, MO
8	Mr. Scott Stookey	City of Phoenix Fire Department	Phoenix, AZ
9	Mr. Ron Stover	Mutual Liquid Gas & Equipment	Gardena, CA
10	Mr. Robert Wallace	Dowdle Butane Gas Co Inc	Maryville, TN
11	Mr. Brent Wolcott	Ag Valley Coop	Edison, NE

Mr. Theodore Lemoff and Dr. Phani Raj participated in the deliberations of the meetings of the Advisory Committee as non-voting members.

The Advisory Committee met on four different occasions during the course of the project and provided valuable guidance and inputs to the contractors. Their efforts and

suggestions are thankfully acknowledged. We also thank Ms. Spear for her support and encouragement throughout the course of this project.

In addition to the Advisory Committee, several people from the industry provided data on various hardware items that are used in a typical propane facility and shared the essence of other work that had been performed previously in connection with analyses similar to that required in the FSA. Our recognition of the concerns in the industry and the need for a manual describing how a FSA can be accomplished originated with our illuminating discussions with Mr. James Hurley, and Mr. Denis Gagne of Eastern Propane, Rochester, NH in 2002. The latter took one of us to visit six different size propane plants in New England to explain the safety designs in plants. We thank them for their unwavering support for this effort and for their readiness to provide any help that was needed.

Also, we thank Mr. Carl Peterson, Assistant Division Director, Public Fire Protection Division, NFPA who provided input into Chapter 8 on evaluation of the capability of the Fire Service.

We wish to thank Mr. David Stainbrook of Rego/ECII for supplying us with the valve line art used in the sample configurations in Chapter 5, Mr. James Griffin of Fisher Controls, and Mr. Greg McRae of Trinity Industries for sharing with us digital photographs of various types of appurtenances used in LP-Gas plants. A tour of various size LP-Gas facilities in California organized by Mr. Al Linder, Chairman of the NFPA 58 Committee, was extremely educational and we thank him for this. Our thanks are also due to Mr. Richard Fredenburg (Department of Agriculture and Consumer Services, State of North Carolina) for sharing with us the essence of a sample fire safety analysis submitted to the state of NC. The authors also wish to thank Mr. Gerry Misel (Georgia Gas Distributors, Atlanta, GA), and Mr. Tim Wood (Northwest Propane Gas Company, Dallas, TX) for their input into the final product.

About the Authors

Phani K. Raj, Ph.D.
Dr. Raj is the President of Technology & Management Systems, Inc. (TMS). He holds S.M. and Ph.D. degrees in Mechanical Engineering as well as an MBA degree.

He has over 30 years professional experience in conducting research in safety research and assessing risks in the storage, transportation, handling and utilization of hazardous materials, including energy fluids. His research has included the development of mathematical models to describe the accidental release behavior of chemicals and flammable materials. In addition, he has developed easy to follow safety guideline documents and hazard assessment manuals for a number of clients including the Federal Agencies and industrial clients.

Dr. Raj developed a number of models for the "Chemical Hazard Response Information System" (CHRIS), which the U.S. Coast Guard and the National Response Center use for assisting in case of hazardous material emergencies. He is the author of CHRIS Manual III "Hazard Assessment Handbook."

Since 1996 he has been a member of the NFPA's Technical Committee on Liquefied Petroleum Gases which writes NFPA 58, Liquefied Petroleum Gas Code. He was a member of the Committee Transportation of Hazardous Materials (of the National Research Council), and emeritus member of the Editorial Board of the Journal of Hazardous Materials. He has held the post of visiting lecturer at MIT and taught, in the Chemical Engineering Department, a graduate level course. He is the principal author of over 100 technical reports and over 40 technical papers.

Theodore C. Lemoff, PE
Mr. Lemoff is the Principal Gases Engineer at the National Fire Protection Association. He holds a Bachelor of Engineering degree in Chemical Engineering and is a registered professional engineer in Massachusetts.

He has over 35 years experience in the fire safety and the chemical industry, with his last 19 years at NFPA working in the flammable gases area. He is the staff liaison and secretary to the NFPA Technical Committee on Liquefied Petroleum Gases, responsible for NFPA 58, and for other NFPA codes and standards on flammable gases. He provides staff interpretations and conducts seminars on NFPA 58 and is the editor of NFPA's Liquefied Petroleum Gases Handbook and National Fuel Gas Code Handbook.

Mr. Lemoff is a member of the American Institute of Chemical Engineers, the Society of Fire Protection Engineers, the Society of Gas Engineers, and the American Society of Plumbing Engineers.

Table of Contents

	Page #
Acknowledgments	(iii)
About the authors	(v)
CHAPTER 1 Introduction	
1.1 Background	1-1
1.2 Scope of the Manual	1-2
1.3 Need for a FSA Manual	1-3
1.4 LP-Gas Safety Record	1-4
1.5 Organization of the FSA Manual	1-4
CHAPTER 2 LP-Gas Storage Container Safety Features	
2.1 A Historical Perspective	2-1
2.2 Current LP-Gas Storage Container Safety Features	2-3
CHAPTER 3 Principal Elements of Fire Safety Analysis	
3.1 Important Steps in Conducting the Analysis	3-1
3.2 Completing the FSA	3-2
CHAPTER 4 Facility Information	
4.1 Initial Data for all LP-Gas Facilities	4-1
4.2 Facility Storage Capacity and Other Details	4-1
4.3 Additional Facility Information	4-2
CHAPTER 5 Analysis of Product Control Measures in Containers and Transfer Piping	
5.1 Product Control Measures in Containers	5-1
5.1.1 Individual Containers of Water Capacity less than or equal to 2,000 gallons	5-2
5.1.2 Individual Containers greater than 2,000 gallons water capacity and less than or equal to 4,000 gallons water capacity	5-9
A) Containers used in Residential and Commercial Facilities	5-9
B) Containers used in Bulk and Industrial Facilities	5-11
5.1.3 Individual Containers of Water Capacity greater than 4,000 gallons	5-17
5.2 Product Control Measures in Transfer Piping	5-23
5.2.1 Manifolded and Remotely Filled Containers	5-23
5.3 Redundant and Fail-Safe Product Control Systems	5-26
5.4 Low Emission Transfer Equipment	5-28

CHAPTER 6 Analysis of Local Conditions of Hazard
6.1 Physical Protection Measures 6-1
6.2 Ignition Control 6-2
6.3 Separation Distances 6-3
6.3.1 Separation Distances between Container and Important Buildings, Other Properties and Transfer Points 6-3
6.3.2 Separation Distances between Transfer Points and other Exposures 6-5
6.4 Special Protection Measures 6-6

CHAPTER 7 Exposure to and from Other Properties, Population Density 7-1
7.1 Exposure to off-site properties and persons from in-plant propane releases 7-1
7.2 Exposure to propane plants from external events 7-3

CHAPTER 8 Evaluation of Fire Services and Water Supply Requirements and Emergency Planning 8-1
8.1 Details of the Fire Service 8-1
8.2 Water Needs and Availability 8-3

CHAPTER 9 Evaluation Summary for a Proposed New LP-Gas Facility 9-1

CHAPTER 10 Fire Safety Analysis Examples 10-1
10.1 Illustrative Example # 1 10-1
10.2 Illustrative Example # 2 10-18
10.3 Illustrative Example # 3 10-33
10.4 Illustrative Example # 4 10-49

Glossary and Acronyms G-1

Appendix A: Fill-In Tables/Forms A-1

Appendix B: B-1

Table B-1 LPG Release Cases [(1)] for Hazard Assessment B-1
Table B-2 Distances to LFL Concentrations and Hazard Areas B-3
Table B-3 Various Parameters and their Values Used in the Cases B-5
Table B-4 Thermodynamic Properties of Propane B-6
Table B-5 Calculation of the Mass Fraction of LPG and n-Butane B-8

Appendix C: Propane Property Values Used in FSA Calculations C-1

Copyright 2004 Propane Education & Research Council. All rights reserved. Reproduction of this publication in other than its entirety is prohibited without permission in writing from the Propane Education & Research Council and the authors.

List of Forms & Tables

		Page #
Table 3.1	Description of the Various Steps in Performing the FSA	3-3
Form 4.1	Initial Data on the LP-Gas Facility	4-1
Form 4.2	Facility Storage Capacity	4-2
Form 4.3	Additional Information on the LP-Gas Facility	4-3
Table 5.1	Container Size Dependant Evaluations	5-1
Form 5.1	Compliance with Code Requirements for appurtenances on containers of less than or equal to 2,000 gallons water capacity	5-3
Form 5.2	Compliance with Code Requirements for appurtenances on containers in the range 2,001 through 4,000 gallons water capacity used in Residences and Commercial Facilities	5-10
Form 5.3	Compliance with Code Requirements for appurtenances on containers in the range 2,001 to 4,000 gallons water capacity used in Bulk and Industrial Facilities	5-12
Form 5.4	Compliance with Code Requirements for appurtenances on Containers of greater than 4,000 gallons water capacity used in Bulk and Industrial Facilities	5-18
Form 5.5	Requirements for Manifolded Transfer Lines of larger than 1½ inch diameter, Liquid-into-Containers	5-23
Form 5.6	Requirements for Manifolded Transfer Lines of larger than 1½ inch diameter, Liquid withdrawal from Containers	5-24
Form 5.7	Requirements for Manifolded Vapor Transfer Lines of larger than 1¼ inch diameter	5-25
Form 5.8	Evaluation of Redundant Fail-Safe Design (For Liquid and Vapor Withdrawal Openings of 1¼ in or larger)	5-26
Form 5.9	Evaluation of of Low Emission Transfer Equipment (For Liquid and Vapor Withdrawal Openings of 1¼ in or larger)	5-28
Form 6.1	Evaluation of Physical Protection and Other Measures	6-1
Form 6.2	Ignition Source Control Assessment	6-2
Form 6.3	Separation Distances between Containers and Buildings, Property Line, etc.	6-3
Form 6.4	Separation Distances between Points of Transfer and other Exposures	6-5
Form 6.5	Special Protection Measures, Requirements for Passive Systems	6-6
Form 6.6	Special Protection Measures, Requirements for Active Systems	6-7
Table 7.1	Distances to Various Types of Propane Hazards Under Different Release Cases	7-2
Form 7.1	Types of Occupancies(1) Near or Surrounding the LP-Gas Plant	7-3
Form 7.2	Exposure to LP-Gas Plant from External Hazards	7-4
Form 8.1	Data on the Responsible Fire Department	8-2
Form 8.2	Response Time data for the Fire Departments	8-4

Form 8.3	Water Flow Rate and Total Water Volume Required to Cool Containers Exposed to a Fire	8-5
Form 8.4	Evaluation of Water Availability in or near the LP-Gas Facility	8-7
Form 9.1	Analysis Summary on Product Control and Local Conditions of Hazard	9-1
Form 9.2	Analysis Summary on Exposure from and to the LP-Gas Facility	9-2
Form 9.3	Analysis Summary on Fire Department Evaluations	9-3
Form 9.4	Redundant and Fail-Safe Design Requirements for Containers	9-5
Form 9.5	Low Emission Transfer Equipment Requirements	9-6
Form 9.6	Special Protection Measures – Requirements for Passive Systems	9-7
Form 9.7	Special Protection Measures – Requirements for Active Systems	9-7
Table 9.1	Alternative Methods of Equivalent Protection for Industrial and Bulk Facilities that do not pose a hazard but lack a water supply	9-9
Table C-1	Propane Property Values Used in FSA Calculations	C-1

List of Figures

		Page #
Figure 5-1	Schematic Representation of the NFPA 58 Requirements for Product Control Appurtenances on containers less than or equal to 2,000 Equal to 2,000 gallons water capacity with different Service Configurations	5-4
	Figure 5-1A: Single Vapor Service Line Configuration	5-4
	Figure 5-1B: Regulator in the Vapor Service Line	5-5
	Figure 5-1C: Container with both Liquid and Vapor Service Regulator in the Vapor Service Line	5-6
	Figure 5-1D: Container Feeding Liquid to a Vaporizer	5-7
	Figure 5-1E: Vertical Container Liquid Service	5-8
Figure 5-2	Vapor Inlet Appurtenances on Containers of greater than 2,001 gallons water capacity	5-13
Figure 5-3	Vapor Outlet Appurtenances on Containers 2,001 gallons or greater Water capacity	5-14
Figure 5-4	Liquid Inlet Valves on Containers in the 2,001 through 4,000 gallons Water capacity range	5-15
Figure 5-5	Liquid Outlet Valves on Containers in the 2,001 through 4,000 gallons Water capacity range	5-16
Figure 5-6	Liquid Inlet Valves on Containers with greater than 4,000 gallons water capacity in Bulk Facilities	5-19
Figure 5-7	Liquid Outlet Valves on Containers with greater than 4,000 gallons water capacity in Bulk Facilities	5-21

CHAPTER 1

INTRODUCTION

1.1 Background

The Fire Safety Analysis (FSA) is a self-conducted audit of the safety features of a propane installation and an assessment of the means to minimize the potential for inadvertent propane releases from storage containers and during transfer operations. The assessment also includes an evaluation of the capabilities of local emergency response agencies as well an analysis of potential hazard exposures from the installation to the neighborhood and from the surrounding to the LP-Gas facility.

Since 1976, NFPA 58, *Liquefied Petroleum Gas Code* (hereinafter referred to as the "Code[i]" or "NFPA 58") has required that a facility operator or owner conduct a FSA for propane facilities having ASME containers of aggregate storage greater than 4,000 gallons water capacity. Additionally, the FSA requirement has been changed in the 2001 edition to require coordination with the local emergency response agencies. The 2001 edition of the Code states…

> *The planning for effective measures for control of inadvertent LP-Gas release or fire shall be coordinated with local emergency handling agencies such as fire and police departments. Planning shall include consideration of the safety of emergency personnel, workers, and the public.*[ii]

Also, the 2001 edition of the code requires a written document for new installations and for existing installations within three years of the effective date of the code as determined by the state or local jurisdiction.

The FSA and required assessment of the installation provides several important benefits:

1) A structured assessment by which each facility can be evaluated for conformity of installed equipment with Code requirements.
2) A means to evaluate the capability of systems and equipment installed to control and contain potential LP-Gas releases during day-to-day operations.
3) An approach to evaluate the informational needs of the facility, based on factors such as the type and frequency of transfer operations, size of the storage containers, location of the facility with respect to other buildings and the existing procedures and systems in place.
4) A means to describe product control and fire protection features which exceed the minimum requirements of NPFA 58.
5) A tool for facilitating a cooperative and effective dialogue with local emergency response agencies and authorities having jurisdiction.

1.2 Scope of the Manual

The manual addresses a number of subjects, including:

(1) A review of the product control measures required in the NFPA 58, "Liquefied Petroleum Gas Code"
(2) Local conditions of hazards within the facility site
(3) Exposures to and from other properties
(4) Effectiveness of local fire departments
(5) Effective control of leakage, fire and exposure
(6) Illustrative examples using four different sizes of typical LP-Gas facilities

This FSA manual is intended for use by propane plant owners or operators, consultants, authorities having jurisdiction (AHJs) and emergency response personnel. The manual addresses the process by which a FSA can be conducted for an LP-Gas facility containing one or more stationary ASME containers.

The FSA manual is designed to provide a guide to identifying the requirements in NFPA 58, and complying with them. Section 3.10.2.2 of NFPA 58 provides, in part, that:

> The first consideration in [this] analysis shall be an evaluation of the total product control system, including emergency shutoff and internal valves equipped for remote closure and automatic shutoff using thermal (fire) actuation pullaway protection, and the optional requirements of [NFPA 58 (2001)] section 3.11, if used.

The philosophy of NFPA 58 is to minimize fires by minimizing the accidental release of propane if an accident should occur, or in simple terms; no fuel, no fire.

The manual **does not** address the following:

1) Marine terminals, refrigerated LP-Gas storage and the transportation of LP-gas either by rail tank cars or by cargo tank trucks. Marine terminals are governed by the OSHA Process Safety Management regulations and the US EPA Risk Management Plan regulations; refrigerated storage of LP-gas is a high-volume operation requiring special considerations; and, the transportation of LP-gas is addressed by Title 49 of the Code of Federal Regulations, *Transportation*.[iii]
2) Storage of LP-Gas in salt domes and caverns.
3) Installations ASME LP-gas containers on roofs of buildings. This type of installation is excluded from the scope of this manual (even though a FSA is required for such operations according to section 3.10.2.2 of the Code) primarily because of the rarity of such installations in the United States.
4) Cylinder filling operations at a dispensing facility, unless the storage threshold for LP-Gas has been exceeded, requiring an FSA to be prepared.
5) The use of facility employees performing as a "fire brigade."

The above facilities may be required to comply with other safety analysis requirements.

1.3 Need for a FSA Manual

Neither NFPA 58 nor the "Liquefied Petroleum Gas Code Handbook"[3iv] provide detailed guidance on how to prepare or develop a written FSA. Since each facility or bulk storage plant presents unique physical and operational characteristics, the fire safety analysis is a tool used to assess the level of fire safety performance that a specific facility or bulk plant can be expected to provide. This FSA will also provide essential information on the facility and its operation to the local authority having jurisdiction (AHJ) and local emergency response agency.

A recent informal survey of AHJ's on the fire safety analyses used for existing and new plants in their jurisdictions (conducted by the author) indicated that there is no uniformity either in content, the details of information, or final assessment of the facility in the FSAs submitted. They range from a single page submission for medium size bulk plant to very detailed assessment including risk assessment and management plan for a 30,000 gallon bulk storage facility. Without a guidance manual, potential confusion would almost certainly occur as each AHJ would be required to establish an individual set of criteria that would meet the FSA in their area. Thus, there is clearly a need in the LP-Gas industry for assistance in the following tasks.

1) Provide a FSA template that allows for consideration of different size installations.
2) Establish a uniform approach and defining common elements.
3) Develop simplified checklists and an example-based methodology for completing the analysis.
4) Utilize technically-based guidance and support.

The intent of this FSA manual is to provide an easy-to-use procedure for LP-gas facility owners or operators who are most familiar with the equipment technology and system operations and therefore qualified to complete the document. Knowledge of fire science and engineering principles is not required for this document to be useable by an owner, operator or an AHJ, because those principles have already been factored into the assessment criteria contained within the FSA.

By utilizing the expertise of industry, engineering and fire service representatives in the development of the material to follow, this manual provides a comprehensive, uniform, objective approach that was designed to provide for the uniform and objective application of FSA requirements by the AHJs. Further, the joint input of the Propane Education & Research Council (PERC), National Propane Gas Association (NPGA), and the National Fire Protection Association (NFPA) provides additional assurance of the manual's depth, credibility and broad-based consensus.

The FSA manual has been developed based on the requirements of NFPA 58, 2001 edition. Using this manual to perform a FSA at a facility constructed to meet the

requirements of prior editions of NFPA 58 or other State specific Codes may produce conflicts between actual facility construction and the checklists in this manual. The code or standard in effect at the time of construction of the facility should be used as the source of requirements to perform the FSA. Checklist items contained within this manual can be revised to indicate the appropriate code items required at the time of facility construction. This document is not intended to serve as a basis for requiring existing facilities to be upgraded to meet the current requirements of the code.

1.4 LP-Gas Safety Record and Risks

The LP-Gas industry has a long history of safe operations. With the requirement in the 1976 edition of NFPA 58 to retrofit LP-Gas plants with emergency shut-off valves (ESVs) in transfer lines, the safety of LP-Gas facilities was further improved.

The FSA provided in this manual, in addition to other safety programs currently enacted at any workplace, is intended to reduce or eliminate the risk of fatality or injury to both the plant employees and the public. In an effort to identify the level of risk a propane installation poses to the general public, as well as employees and emergency responders, the U.S. Department of Energy (DOE) instituted a study[4v] in 1981. Accident data from a variety of sources was analyzed, including: the US Department of Transportation hazardous material incident report database, reports of the National Transportation Safety Board, National Fire Protection Association, technical journals and other sources. Data analyzed for the period 1971 through 1979 addressed LP-Gas transportation and product releases from stationary storage facilities. The special focus of the study was the fatalities suffered by employees and the general public. The study concluded that a fatality to the general public as a direct result of an LPG transportation or storage incident involving the loss of product is very small and the risk (expressed in expected number of fatalities per year) is smaller than that from natural phenomena (lightning, tornadoes, objects falling from the sky, etc).

An analysis conducted by the National Fire Protection Association[vi] of LP-Gas fire damage and casualty data also indicates that the LP-Gas storage facility operations in the US are very safe. The number of reported fires at LP-Gas bulk storage facilities remains small and has fallen since 1980, but substantial variation exists from year to year. During the five-year period from 1994 through 1998, an estimated 49 fires, on average, were reported per year at LP-Gas bulk storage facilities. These fires caused an annual average of one civilian death, five civilian injuries and $754,000 in direct property damage. In 1999, an estimated 58 reported fires on these properties caused four civilian injuries and $722,000 in direct property damage. The 58 fires reported in 1999 accounted for .003% of all fires reported that year.

1.5 Organization of the FSA Manual

The manual has been organized to address the requirements outlined in NFPA 58 (section 3.10.2) and Appendix A (A3.10.2.2).

Chapter 2 discusses the requirements of the 2001 edition of NFPA 58 in regard to product control requirements, and their evolution. The philosophy and the advantages of product control systems are discussed. Also included are the various appurtenances used in a typical LP-Gas facility. More detailed information on the types of valves, their functions and example photographs of various appurtenances are provided in Appendix B. Chapter 3 provides an overview of the FSA process including its principal elements.

The input of data into the FSA procedure begins with Chapter 4. In Chapter 4 basic information about the LP-Gas facility are input into appropriate tables and a decision is made (based on the data provided) as to how much of the analysis is required to be completed. The assessment of conformity with Code requirements of the product control requirements for the container and in transfer piping is carried out in Chapter 5. To aid this assessment a series of sketches of possible configurations of container appurtenances (satisfying 2001 Code requirement) are provided. When necessary, the year when specific equipment was required by the Code is also indicated on the sketches to facilitate application of the Manual to facilities constructed to previous editions of NFPA 58. The analysis of the local conditions of hazard is presented in Chapter 6, followed by the assessment in Chapter 7 of the hazard exposure to off-site properties and persons. Also, the potential exposure to LP-Gas installations from off-site activities is covered in Chapter 7.

The evaluations of the capabilities of the local emergency responder (usually the fire department) and the availability of water to fight in-plant fires and exposures are presented in Chapter 8. Summary of evaluations and actions that may need to be initiated for proposed LP-Gas facilities are presented in Chapter 9. Four generic completed examples of how to use the manual for preparing a written FSA for a LP-Gas facility are provided. Several different sizes of facilities are considered.

A set of forms required for facilities containing different sizes of containers are provided in Appendix A-1, Appendix A-2, and Appendix A-3. The LP-Gas properties used in some of the calculations are indicated in Appendix C. Hazard distance calculation results for different LP-gas release scenarios are provided in Appendix E.

---

[i] The word "Code" used in this manual refers to NFPA 58, the Liquefied Petroleum Gas Code, 2001 edition.
[ii] NFPA 58, Liquefied Petroleum Gas Code, § 3.10.2.1
[iii] U. S. Code of Federal Regulations, Title 49, Transportation
[iv] Liquefied Petroleum Gas Handbook, Lemoff, 2001, NFPA, Quincy MA
[v] LPG Land Transportation and Storage Safety, Department of Energy report No. DOE/EV/06020-TS 9/18/81"
[vi] *Fires at LP-Gas Bulk Storage Plants Statistical Analysis*, NFPA, 2003, Quincy, MA

CHAPTER 2

LP-Gas Storage Container Safety Features

The fundamental premise of LP-Gas facility safety in the 2001 edition of NFPA 58 is that if product release can be either controlled or eliminated, safety is effectively enhanced. Conversely, a product release creates the potential for fire. Therefore, both NFPA 58 and the Fire Safety Analysis focus on the need to engineer systems (incorporating product controls) to ensure, to the extent possible with current technology and procedures, the elimination of the accidental release of LP-gas from storage or during transfer operations.

2.1 A Historical Perspective

In the late 1960's and the early 1970's there were a number of fires and BLEVE (Boiling Liquid Expanding Vapor Explosions) of propane and other liquefied petroleum gases resulting from derailments of railcars carrying propane and other flammable liquefied gases. These incidents involved fire fighter fatalities and highlighted the need for safety improvements. As a result, the U. S. Department of Transportation (DOT) implemented new regulations for the tank cars used to transport propane and other liquefied flammable gases, and made them mandatory and retroactive in 1980. These improvements included:

- Head shields to reinforce the pressure vessel on the railcar;
- Shelf" couplers to reduce the potential for railcars to be uncoupled during a derailment; and,
- Thermal protection to reduce the potential for the tank to experience a rise in temperature due to flame impingement.

Since these improvements in rail car safety were made in the 1980's, there have been no firefighter fatalities from railroad tank car BLEVEs and the number of these incidents has been greatly reduced.

In 1973, product control requirements to prevent the uncontrolled release of LP-gas from storage containers consisted primarily of manually operated valves, back-flow check valves and excess-flow check valves.

On July 3, 1973 a propane incident occurred in Kingman, Arizona involving a propane fire at a propane tank car unloading area in a propane bulk storage plant. Though the plant's equipment conformed to the requirements of NFPA 58 and other safety standards for flammable materials at that time, the incident resulted in the death of several firefighters and one plant employee.

A direct result of this incident (and others that occurred at approximately the same time) was the addition of a new fire protection requirement in the 1976 edition of NFPA 58. The requirement stated that planning "for the effective measures for control of inadvertent LP-Gas release or fire[i]" shall be done and coordinated with local emergency

responders. In addition, the primary consideration of a fire safety analysis at that time was the use of water as a suppressing agent to control fires. The requirements today are very similar to those original requirements except in two areas.

- As of the 2001 edition, fire safety analyses are required to be written;
- The primary consideration in performing such an analysis has changed from the emphasis of using water for fire control to the emphasis of avoiding product release altogether using technology and training.

This modern approach takes advantage of the inherent safety present in a controlled environment such as a bulk plant, as well as the safety features of the most current product control hardware.

In early editions of NFPA 58, the primary consideration of water as the means to control a fire was based on the fact that at that time, there were few reliable ways to stop the flow of LP-gas from system failures and the need to apply water quickly to storage containers being impinged by flames was important.

Another significant change in the 1976 edition of NFPA 58 was the requirement for an Emergency Shutoff Valve (ESV) in the transfer lines used between stationary storage containers over 4,000 gallons and cargo tank vehicles. This revision was intended to prevent product release from storage containers in the event of a vehicle pulling away with hoses still connected. All existing plants were required to comply with this requirement by the end of 1980. Since this retrofit program was completed, there has not been, to the knowledge of the authors, a pull-away accident involving an ESV installation that resulted in serious consequences.

The 1980's enjoyed a reduced number of propane incidents in the U. S., and the next major product control enhancement was the revision to introduce an optional requirement for internal tank valves in containers over 2,000 gallons in the 1992 edition of NFPA 58. These tank valve requirements included

Vapor and Liquid Withdrawal Openings in Tanks
1. Positive shutoff valve in line with excess flow valve installed in the tank, or
2. Internal valve with integral excess flow shutoff capability

Vapor and Liquid Inlet Openings in Tanks
1. Positive shutoff valve in combination with either an excess flow valve or backflow check valve installed in the tank, or
2. Internal valve with integral excess flow valve, or
3. Internal valve with remote means of closure

These revisions were made to enhance the operational features of product control hardware. Internal valves are capable of being closed from a remote location (using a cable, pneumatic, or hydraulic device) and by thermal activation, which is accomplished

using an element that melts when it is subjected to fairly moderate temperatures (in the 200ºF - 250º F range).

The 2001 edition of NFPA 58 was further revised to require internal valves for liquid connections to containers over 4,000 gallons, with remote and thermal shutoff activation. This change was the result of the Committee desiring improved safety performance with this advanced hardware, due to the following incidents:

- **Sanford, NC**. A hose separation resulted in the loss of the contents of a transport vehicle (9700 gallons water capacity). The contents within the storage containers were also lost because of a failed check valve.
- **Albert City, Iowa**. An exposed liquid pipe installed in violation of the code between an 18,000 gallon water capacity storage container and a vaporizer was broken when a recreational vehicle accidentally drove over it. The leaking gas found a source of ignition and impinged on the container, resulting in a BLEVE.
- **Truth or Consequences, NM**. A small parked truck rolled into a propane bulk storage plant, breaking plant piping. The resulting fire caused the failure of several cylinders.

These improvements in product control are considered critically important, and in addition to requiring them for all new installations after 2001, the requirements were made retroactive to all existing installations, allowing 10 years for the conversion. All existing containers over 4,000 gallons water capacity will be retrofit with an internal valve or similar protection on all liquid connections. Alternatively, the use of an Emergency Shutoff Valve (ESV) as close to the container as practical is also allowed to recognize that some containers can not accommodate an Internal Valve without extensive modification. The ESV has the same remote and thermal activation closing features as an internal valve.

2.2 Current LP-Gas Storage Container Safety Features

As of the 2001 edition, NFPA 58 requirements for product release control include the provision for a number of different types of valves or appurtenances in the product storage containers, transfer piping network and at liquid transfer locations. Generally, code requirements for product control appurtenances on containers used in industrial plants and bulk plants are more stringent than for residential and commercial use containers.

Unless product is being transferred, product control valves are normally in the closed position. However, some of the installations require an automatic shut off feature when either a fire (or heat) is sensed or when other abnormal conditions occur. The product control valves include the following:

Positive shut off valve: A manually operated shutoff valve used to control the flow of propane.

Back flow check valve: This valve allows flow in one direction only and is used to allow a container to be filled while preventing product from flowing out of the container.

Excess flow valve: A valve designed to close when the liquid or vapor passing through it exceeds a prescribed flow rate.[ii]

Internal valve: A container primary shutoff valve whose seat and seat disc remain inside the container so that damage to parts exterior to the container or mating flange does not prevent effective sealing of the valve and that has the following features: (1) provision for the addition of a means of remote closure; and (2) automatic shutoff when the flow through the valve exceeds its rated maximum flow capacity or when pump actuation differential pressure drops to a predetermined point.[iii]

Emergency shut off valve: A shutoff valve incorporating thermal and manual means of closing the valve and that also provides for a remote means of closing to be attached.[iv]

Hydrostatic pressure relief valve: A type of relief valve that is set to open and relieve pressure in a liquid hose or pipe segment between two shutoff valves when the pressure exceeds the setting of the valve.

Container pressure relief valve: A type of pressure relief device designed to both open and close to prevent excess internal fluid pressure in a container. The valve is located in the vapor space of the container.

Bulk storage installations incorporate several product release control appurtenances. This fire safety analysis manual outlines alternative schematics for the various facilities covered (2,000 gallons or less; 2,001 gallons through 4,000 gallons; and, greater than 4,000 gallons water capacity).

---

[i] NFPA 58, Standard for the Storage of Liquefied Petroleum Gases, 1976
[ii] NFPA 58, Liquefied Petroleum Gas Code, 2001 § 1.7.71.2
[iii] ibid, § 1.7.71.4
[iv] ibid, § 1.7.71.1

CHAPTER 3

Principal Elements of the Fire Safety Analysis

The principal elements of the Fire Safety Analysis (FSA) required by NFPA 58 (§3.10.2 and its explanations in §A3.10.2.2) are described in this chapter. This manual for performing the FSA addresses the following LP-Gas facility related items:

1. Effectiveness of Product Control measures.
2. Local conditions of hazard within the container site, including congestion within the site.
3. Exposure to off-site properties and populations and impact of neighboring industrial activity on the facility.
4. Effectiveness of the local Fire Department that may respond to an emergency within the facility.
5. Requirements for and availability of adequate water supply.
6. Full compliance with Code requirements for existing LP-Gas facilities and corrective actions to be implemented by a proposed facility to address any deficiencies.

The details of how each of the above items is evaluated in performing the FSA are indicated in Chapter 4 though Chapter 9. Shown below is a brief review of the various steps involved in conducting the FSA.

3.1 Important Steps in Conducting the Analysis

The development of a Fire Safety Analysis (FSA) involves a number of important steps. These steps are indicated in Table 3.1. Also shown in Table 3.1 are the chapters in this manual where the referenced analyses steps are discussed in detail.

Each set of FSA requirements is presented in one or more tables and fill-in forms. The tables provide either factual information or calculated results; the user obtains information from the tables for further analyses. The fill-in forms specify NFPA 58 requirements or other assessment parameters, and provide two columns, one with a “YES” column heading and the other with a “NO” heading. In some cases either schematic or pictorial representations are provided to clarify a requirement. The fill-in forms require some information input from the user, either checking a “YES” column or a “NO” column or writing a numerical value. Also provided are notes under each table or fill-in form, which explains conditions, if any, associated with the table or the form or how a calculation is performed for entering data into the form.

Appropriate explanations are provided in the text either preceding a form or after the form, if any action is necessary depending upon the values/contents in the forms. A blank copy of each form presented in Chapter 4 through Chapter 9 is provided in Appendix A. These can be reproduced and used for any number of LP-Gas facilities.

The FSA for a LP-Gas facility is conducted by systematically completing the forms in Chapter 4 through Chapter 9. The person completing the FSA must indicate a "Yes" or "No" in the appropriate column for each requirement, depending upon whether the LP-Gas facility fulfills the specific requirement. Any items which may need to be undertaken to correct a deficiency in a proposed (as opposed to existing) LP-Gas facility are referred to in Chapter 9.

Once the FSA is complete, the forms together with information about the facility can be filed to satisfy the "written" requirement of NFPA 58, §3.10.1. Any emergency planning for the facility can be coordinated with the local Fire Department or equivalent responding authority.

3.2 Completing the FSA

The next six chapters provide a framework with which the Fire Safety Analysis can be conducted to satisfy the requirements of NFPA 58. It is important to note the following in performing the analyses using the tables, fill-in forms and steps indicated in the following chapters.

1. All references to the "Code" in this manual are to the **2001** edition of the NFPA 58 "Liquefied Petroleum Gas Code."

2. If a LP-Gas facility was built to satisfy the requirements of an earlier edition of NFPA 58, then only the requirements from the earlier edition need to be satisfied when performing the FSA using this manual. If an appurtenance or other requirement is specified in one or more of the forms in this manual (developed based on the 2001 edition), and this requirement was not in the edition to which the facility was built, then it is recommended that the "Yes" and "No" column corresponding to the particular appurtenance or requirement be left blank or marked "N/A."

3. If the facility for which the analysis is being performed was constructed to satisfy the requirements of a previous edition of NFPA 58, it must still comply with all requirements that have been made applicable retroactively in later editions of the code, through the 2001 edition. Such retroactive provisions are indicated where applicable.

Table 3.1
Description of the Various Steps in Performing the FSA

Step #	FSA Steps	Chapter where described
1	Gather data on the volume of LP-Gas stored and other information pertinent to the facility .	Chapter 4
2	Perform simple calculations and determine whether the facility is subject to the requirements for developing an FSA.	
3	Evaluate the product control appurtenances and other safety features of the facility relative to the requirements of NFPA 58 Code.	Chapter 5
4	Assess the appurtenance requirements for containers of different capacities and compare them to the actual installation.	
5	Evaluate the requirements for valves on transfer piping and compare them to the valves provided in the facility.	
6	Assess conformance to the Code of a Redundant and Fail-Safe Product Control System, if such a system is provided in the facility.	
7	Evaluate the Code conformance of the Low Emission Transfer Equipment if installed in the facility.	
8	Analyze the protection measures against local conditions of hazard. That is, assess whether all requirements of the Code for the physical protection of containers and transfer piping are implemented.	Chapter 6
9	Analyze the Code requirements for the control of ignition sources and whether these requirements are complied with.	
10	Assess conformance to the code requirements for separation distances between (i) containers of different sizes and property and, (ii) LP-Gas transfer points and other exposures.	
11	Evaluate conformance to the Code requirements for Special Protection Systems, if they are provided on containers in the facility.	
12	Evaluate the potential hazards to off-site populations and property from propane releases in the facility. This step includes selecting credible LP-Gas release scenarios and assessing the distance (and area) over which the hazard exists.	Chapter 7
13	Assess whether any off-site populations, especially people in institutional occupancies, are potentially subject to the LP-Gas release hazards	
14	Evaluate whether there exists a hazard from other industrial operations around the LP-Gas facility	
15	Evaluate the effectiveness of the local Fire Department, including the availability and capability of response personnel, training level, equipment and response time to an emergency in the facility.	Chapter 8
16	Evaluate the amount of water needed to cool containers exposed to a fire and the adequacy of the facility (or locally available) water supply.	
17	For a proposed facility, develop corrective actions to address deficiencies found.	Chapter 9 (Only applicable for proposed facilities)
18	Assess, based on specific criteria, the need to provide Redundant and Fail-Safe Product Control Systems.	
19	Assess, based on specific criteria, the need to provide Low Emission Transfer Systems.	
20	Assess when Special Protection Systems are needed	
21	Evaluate alternative approaches to using water in a special protection system	

CHAPTER 4

Facility Information

In this chapter basic information on the LP-Gas facility is recorded and a decision is made on whether the facility is required to complete the Fire Safety Analysis (FSA). If it is determined that a FSA is needed, additional information on the facility is recorded.

4.1 Initial Data for all LP-Gas Facilities

Complete Form 4.1 to provide basic information on the facility.

Form 4.1
Initial Data on the LP-Gas Facility

A	B	C
Item #	**Information Item**	**Data**
1	Name of the LP-Gas Facility Owner or Operator	
2	Contact Name:	
3	Contact Telephone & Fax Numbers	
4	Contact Email Address	
5	Mailing Address	Street 1:
		Street 2:
		City, State, Zip:

4.2 Facility Storage Capacity and Other Details

Complete Form 4.2. Multiply Column B by its corresponding entry in Column C, write the answer in the corresponding cell in Column D, then sum all the entries in Column D and write it in Row 2, Column D. This number is the "Aggregate Water Capacity" of the facility.

Form 4.2
Facility Storage Capacity [1,2,3]

A	B	C	D
Item #	Individual Container Water Capacity (w.c.) (gallons)	Number of containers	Total Water Capacity (w.c.) of each container size (gallons)
1	500		
	1,000		
	2,000		
	4,000		
	10,000		
	18,000		
	30,000		
	60,000		
	Other:		
	Other:		
	Other:		
	Other:		
2	**Aggregate Water Capacity[4]**		

Notes:
(1) Column D = Column B x Column C.
(2) Parked bobtails, transports and tank cars should not be considered for aggregate capacity calculations.
(3) Do not consider containers that are not connected for use.
(4) For the purpose of this manual, "Aggregate Water Capacity" means a group of single ASME storage tanks connected together with manifold piping.

If the aggregate water capacity of the LP-Gas facility is less than or equal to 4,000 gallon (w.c.), no further assessment is required.

YOU CAN STOP HERE.

If the aggregate water capacity of the facility is greater than 4,000 gallons, continue the analysis.

If the aggregate (water) storage capacity of the facility exceeds 4,000 gallons, complete the remainder of the forms below.

4.3 Additional Information on the Facility

Complete Form 4.3 below and record additional information on the facility.

Complete also the remainder of Fire Safety Analysis indicated in Chapter 5 through Chapter 8 (plus Chapter 9 for proposed facilities).

Form 4.3
Additional Information on the LP-Gas Facility

☐ Existing Facility; Built to NFPA 58 Edition _____ ☐ Proposed Facility

a) Name of the Facility (if applicable) _____

b) Type of LP-Gas Facility ☐ Commercial ☐ Industrial ☐ Bulk Plant

c) Facility is located in ☐ Rural Area, ☐ Suburban Area, ☐ City Commercial Zone
☐ City Industrial Zone

d) Facility neighbors[§]: ☐ Agri. fields ☐ Commercial Bldgs. ☐ Flammable Liquids Storage
(Check all that apply) ☐ Industrial Activity (metal fabrication, cutting and welding, etc)
☐ Manufacturing ☐ Others (explain) _____

e) Geographic Location of Facility/Address: _____
_____

f) Landmarks, if any: _____
_____

g) LP-Gas liquid supply by: ☐ Bobtail ☐ Truck Transport ☐ Rail Tank Car
(Check all that apply) ☐ Pipeline

h) LP-Gas Distribution by: ☐ Bobtail ☐ Truck Transport ☐ Vapor Piping
(Check all that apply) ☐ Liquid Piping ☐ Dispensing or Vehicle Liquid fueling

i) Number of Vehicle Entrances: ☐ One ☐ Two ☐ More than two

j) Type of Access Roads to the Facility ☐ Rural ☐ City or Town ☐ Highway
(One check per line) Entrance 1 ☐ Dirt road ☐ Gravel road ☐ Paved
(One check per line) Entrance 2 ☐ Dirt road ☐ Gravel road ☐ Paved

k) Staff presence ☐ Not staffed ☐ Only during transfer operations
☐ Staffed always (24/7) ☐ Only during business hours
☐ Other (Explain) _____

l) Location and distances to Institutional Occupancies surrounding the facility, if any, within 250 ft from the facility boundary in the direction of the assets.
_____
_____

m) Overview plot plan of the facility attached? ☐ Yes ☐ No

§ All properties either abutting the LP-Gas facility or within 250 feet of the container or transfer point nearest to facility boundary.

CHAPTER 5

Analysis of Product Control Measures In Containers and Transfer Piping

5.1 Product Control Measures in Containers

NFPA 58 requires the installation of several product control safety devices both on containers and in transfer piping to minimize the accidental release of LP-Gas, either liquid or vapor. The requirements for product control equipment depend on…

- The size of individual containers;
- Whether the containers in a facility are individually filled or filled through a common liquid manifold,
- Whether the product is transferred from the storage container as a liquid or vapor (or both).

A facility may have LP-Gas containers of different sizes; it is therefore necessary to evaluate compliance with the Code requirements on a container-by-container basis as well as on a facility basis.

In this chapter, the appurtenance requirements of the Code are listed for LP-Gas containers of different sizes and configured for different types of service. A series of forms are provided which indicate the Code-required product control hardware for container and facility piping. The forms also provide space to record the product control equipment actually installed on the containers as well as transfer piping at the facility. These forms must be completed as a part of this Fire Safety Analysis.

Complete Form 5.1, depending upon the size of the individual containers in the facility. Then, perform an analysis of the product control appurtenances for each container located in the facility.

Table 5.1
Container Size Dependant Evaluations

If the LP-Gas facility contains individual containers in the volume range (gallons w.c.)		Perform the analysis specified in Section
Greater than	And Less than or equal to	
0	2,000	5.1.1
2,000	4,000	5.1.2
4,000	-	5.1.3

NOTE: While the schematics of various container service configurations provided in this manual show separate product control valves (such as manual shutoff, excess flow, back check, etc.) on containers, multipurpose valves are also allowed. Multipurpose valves combine the functions of two or more valves. For the purposes of this FSA consider each function in the multipurpose valve as a separate valve for completing the forms.

5.1.1 Individual Containers of Water Capacity less than or equal to 2,000 gallons

Containers of 2,000 gallons water capacity (w.c.) or less can be configured with product control appurtenances in a number of different ways. These are schematically illustrated in Figures 5-1A through Figure 5-1E. *Note: Container appurtenances shown are illustrative of product control equipment only. See NFPA 58 for all container appurtenances required. Illustrations are not intended to be used for system design purposes.*

Complete the following steps using the schematics in Figure 5-1A through Figure 5-1E

1. Select the first container at the facility which has a water capacity of 2,000 gallons or less. Enter this as container number 1 in Column A of Form 5.1, below.
2. Review each of the service configurations given in Figure 5-1A through Figure 5-1E. Select the schematic that most closely represents the configuration in the facility for this container. Enter the figure number of the configuration selected for this container in Column B.
3. Count the total number of "Yes" shown in this configuration. This represents the number of required appurtenances for the specific configuration. Enter this number in column C of Form 5.1.
4. Check "Yes" under each appurtenance that is actually installed on the container. If the appurtenance is not provided, then check "No."
5. Count the number of boxes checked "Yes." Enter this number in Column D of Form 5.1.
6. Repeat steps 1 through 5 for each container of 2,000 gallons water capacity or less at the facility.

Form 5.1

Compliance with Code Requirements for Appurtenances on Containers of 2,000 Gallons Water Capacity or Less

A	B	C	D	E
Container #	**Service Configuration Sub Figure (in Figure 5.1)**	**Number of Product Release Control Appurtenances**		**NFPA 58 Section Reference (2001 edition)**
		Required by NFPA 58 (applicable edition)	**Installed on the Container**	
1				2.3.3.2(a) and Table 2.3.3.2(a)
2				
3				
4				
5				
6				

If, in Form 5.1, any one of the numbers in column D is less than the number in Column C of the corresponding row, these items must be addressed and brought into compliance with the specific edition of NFPA 58 that the facility was constructed to.

Figure 5-1
Schematic Representations of the NFPA 58 Requirements for Product Control Appurtenances on Containers of Water Capacity Less Than or Equal to 2,000 Gallons, With Different Service Configurations

(Note: Container appurtenances shown are illustrative of product control equipment only. See NFPA 58 for all container appurtenances required. Illustrations are not intended to be used for system design purposes)

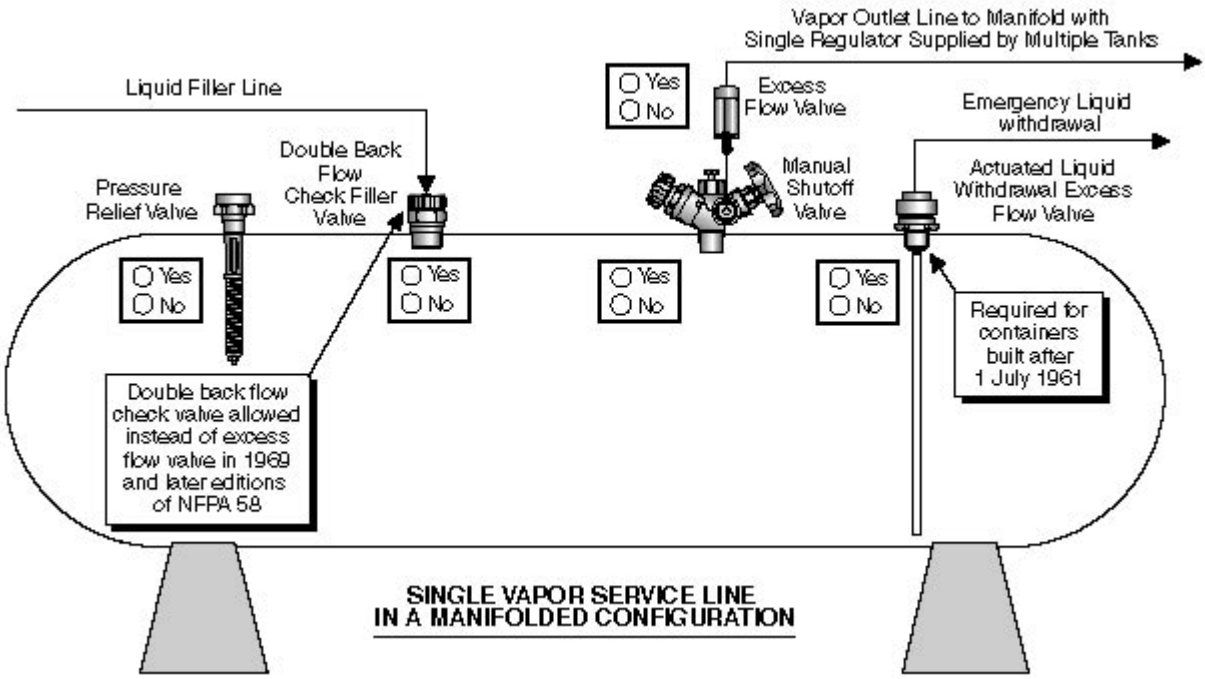

Figure 5-1A: Single Vapor Service Line in a Manifolded Configuration

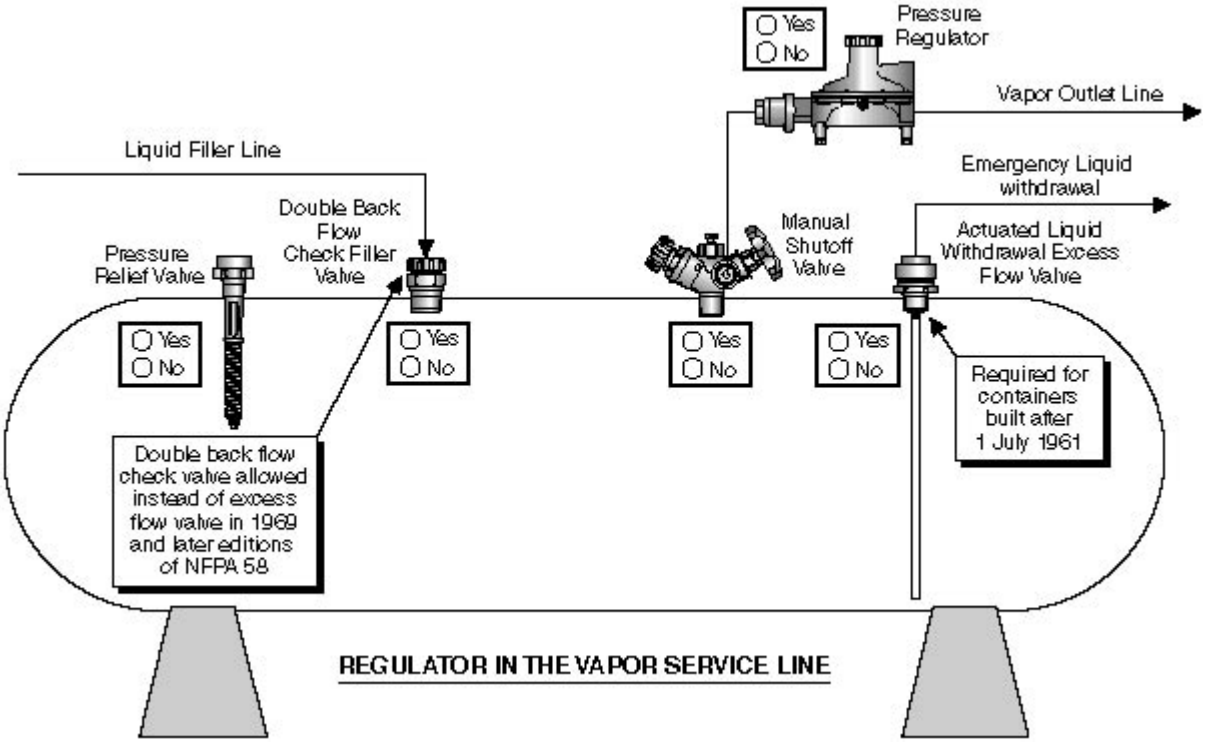

Figure 5-1B: Regulator in the Vapor Service Line

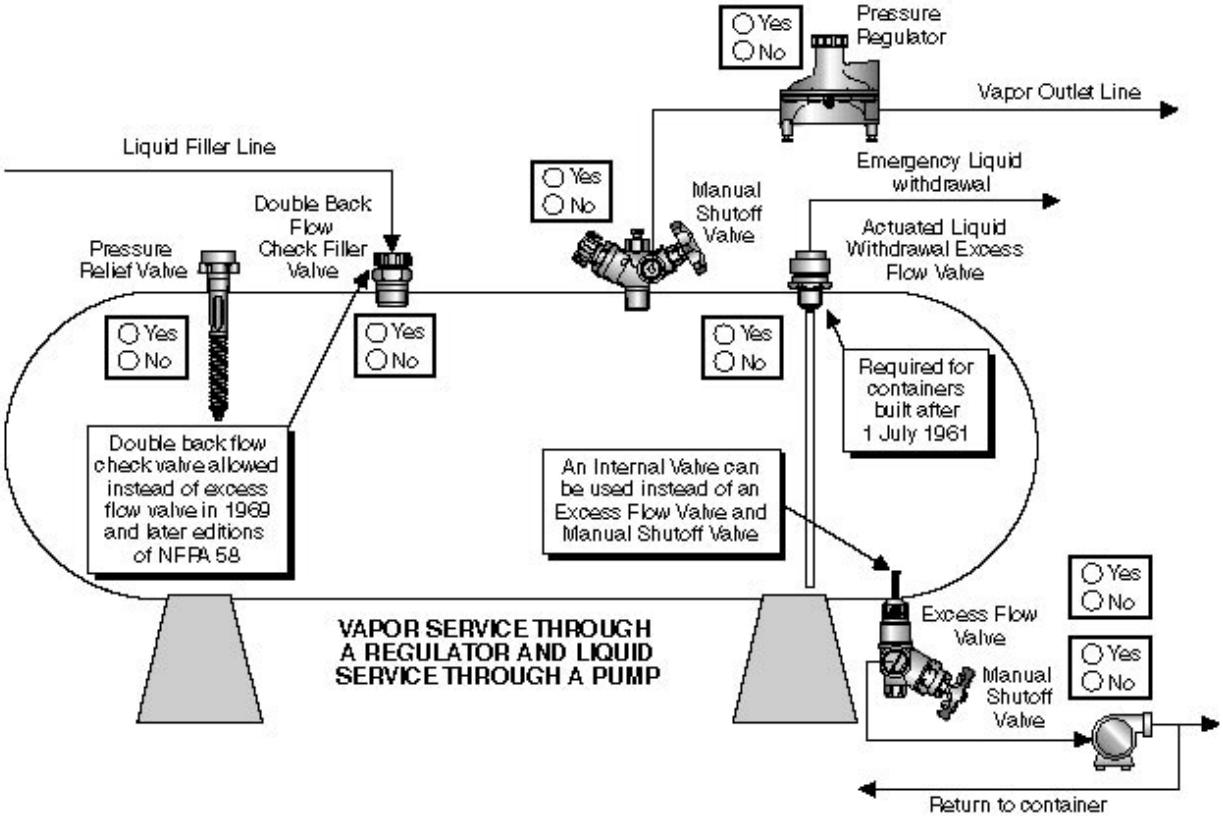

Figure 5-1C: Container with Both Liquid and Vapor Service, Regulator in the Vapor Service Line.

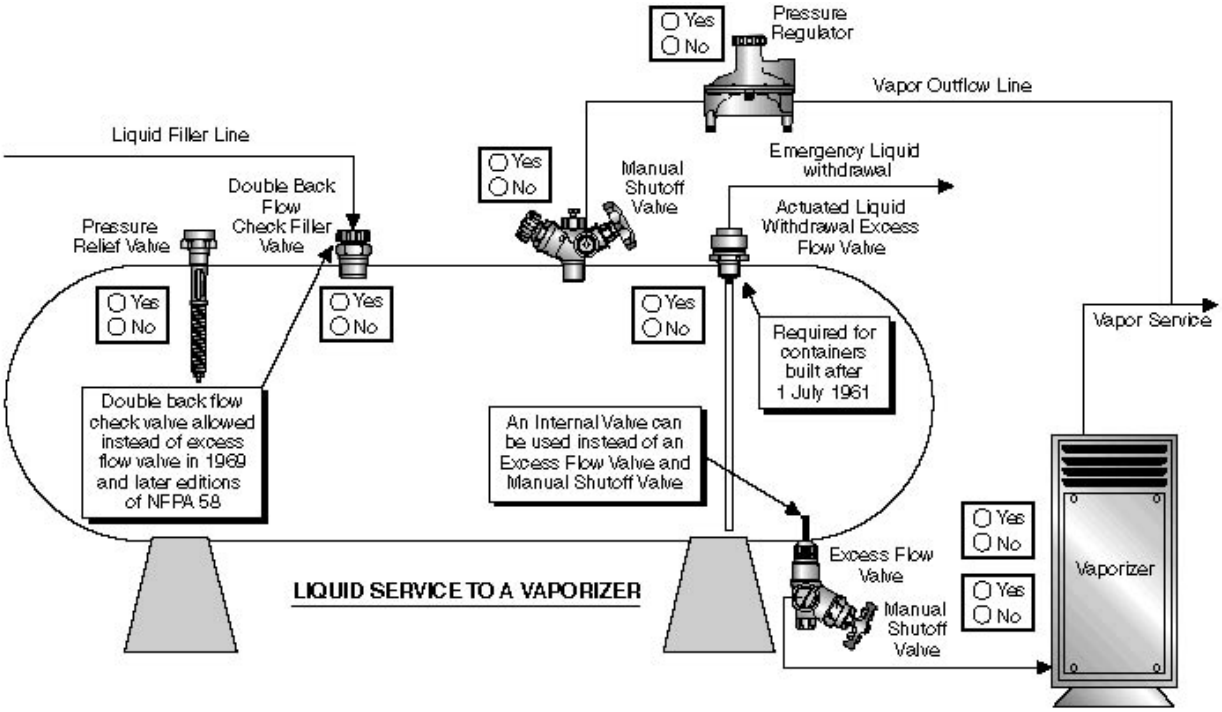

Figure 5.1D: Container Feeding Liquid to a Vaporizer.

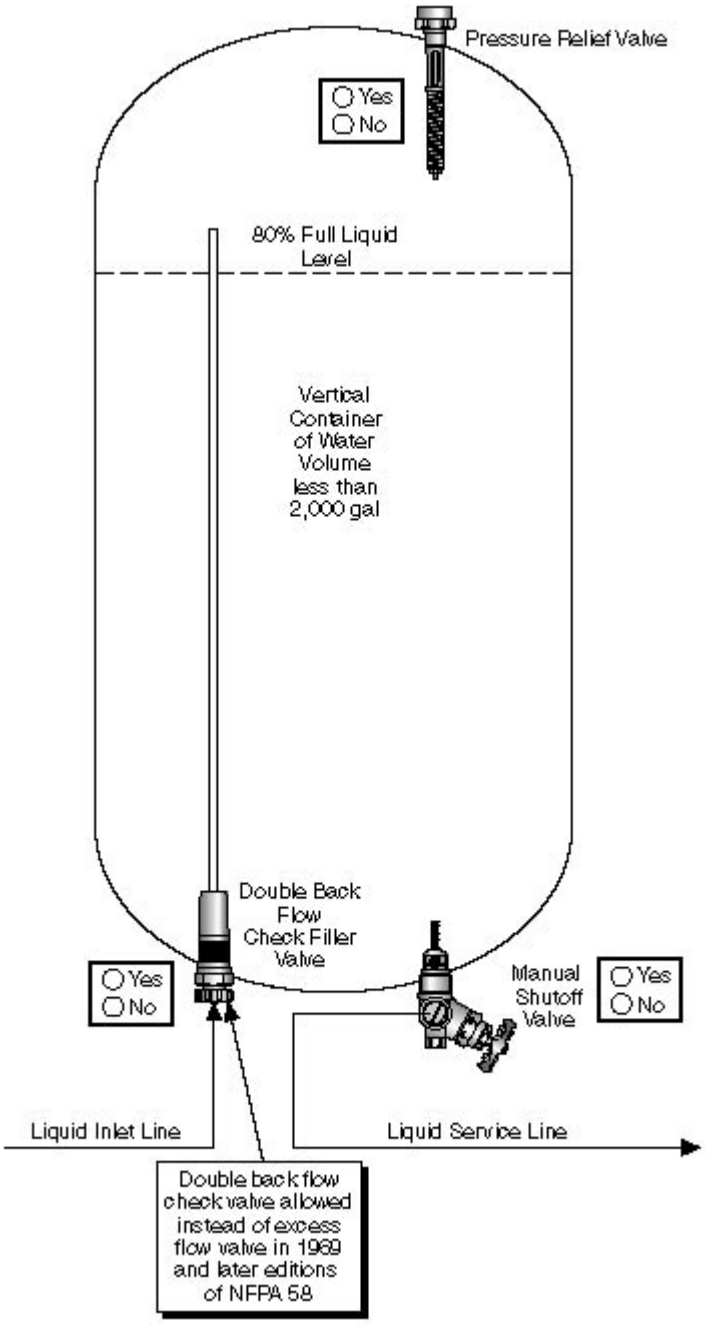

Figure 5.1E: Vertical Container Liquid Service.

5.1.2 Individual Containers greater than 2,000 gallons water capacity and less than or equal to 4,000 gallons water capacity

A) Containers used in Residential and Commercial Facilities

Product control appurtenance requirements for containers of greater than 2000 and less than or equal to 4000 gallons water capacity used in residential and commercial establishments are the same as those discussed earlier having water capacity of 2000 gallons or less. Hence, the same analysis as in the previous section 5.1.1 should be performed. These are indicated below. *Note: Container appurtenances shown are illustrative of product control equipment only. See NFPA 58 for all container appurtenances required. Illustrations are not intended to be used for system design purposes.*

Complete the following steps using the schematics in Figure 5-1A through Figure 5-1E:

1. Select the first container in the facility of more than 2000 through 4,000 gallons water capacity. Enter this as container number 1 in Column A of Form 5.2 below.
2. Review each of the service configurations given in Figure 5.1A through Figure 5.1E. Select the schematic that most closely represents the configuration in the facility for this container. Enter in column 2 the figure number of the configuration selected.
3. Count the total number of "Yes" shown in this configuration. This represents the number of required appurtenances for the specific configuration. Enter this number in column C of Form 5.2.
4. Check "Yes" under each appurtenance that is actually installed on your container. If the appurtenance is not provided, then check "No."
5. Count the number of boxes checked "Yes." Enter this number in Column D of Form 5.2.
6. Repeat the above steps 1 through 5 for each container of water capacity in the range of more than 2,000 through 4,000 gallons.

Form 5.2

Compliance with Code Requirements for Appurtenances on Containers Greater Than 2,000 through 4,000 Gallons Water Capacity Used in Residential and Commercial Facilities

A	B	C	D	E
Container #	**Service Configuration Sub Figure (in Figure 5.1)**	**Number of Product Release Control Appurtenances**		**NFPA 58 Section Reference (2001 edition)**
		Required by NFPA 58 (applicable edition)	**Installed on the Container**	
1				2.3.3.2(a) and Table 2.3.3.2 (a)
2				
3				
4				
5				
6				

If, in Form 5.2, any one of the numbers in column D is less than the number in Column C of the corresponding row, these items must be addressed and brought into compliance with the specific edition of NFPA 58 that the facility was constructed to.

B) Containers used in Bulk and Industrial Facilities

The Code requirements for product release control appurtenances on containers used at industrial facilities and bulk plants are more stringent than those used for residential and commercial service. Several different service configurations are acceptable. These are indicated in Form 5.3. *Note: Container appurtenances shown are illustrative of product control equipment only. See NFPA 58 for all container appurtenances required. Illustrations are not intended to be used for system design purposes.*

Enter the information in Form 5.3 by following the steps indicated below

1. Select the first container in the facility of more than 2,000 through 4,000 gallons water capacity. Enter this as container number 1 in Column A of Form 5.3 below.
2. Complete, for each container, the rows identified as vapor inlet, vapor outlet, liquid inlet and liquid outlet service.
3. Select the appurtenance configuration for vapor service corresponding to the design used in the facility. Figure 5-2 shows different vapor inlet configurations. Enter, in column E, the configuration number that corresponds to the design used in the facility.
4. Count all "YES" in the schematic sketch corresponding to this configuration. This is the number of appurtenances required by NFPA 58. Enter this number in column F of the row corresponding to "Vapor Inlet."
5. Check "Yes" corresponding to each appurtenance that is installed on this container. If the appurtenance is not provided, then check "No" for that appurtenance. Count the total number of installed appurtenance boxes marked "YES" in the facility. Record this number in column G of the same row.
6. Repeat steps 3, 4 and 5 for each vapor outlet configuration (using Figure 5-3), liquid inlet configuration using Figure 5-4, and liquid outlet configuration using Figure 5-5.
7. Repeat steps 1 through 6 for each container greater than 2,000 through 4,000 gallons water capacity located in the facility.

Form 5.3

Compliance with Code Requirements for Appurtenances on Containers Having a Water Capacity of 2,001 through 4,000 Gallons Used in Bulk and Industrial Facilities

A	B	C	D	E	F	G
Container #	LP-Gas inlet to and outlet from the container**		Figure #	Total Number of Product Release Control Appurtenances		NFPA 58 Section Reference (2001 edition)
				Required by NFPA 58 (applicable edition)	Installed on the container	
1	Vapor	Inlet	5-2			3.3.3.6 (a)
		Outlet	5-3			3.3.3.6 (c)
	Liquid	Inlet	5-4			3.3.3.6 (b)(1)
		Outlet	5-5			3.3.3.6 (d)(1)
2	Vapor	Inlet	5-2			
		Outlet	5-3			
	Liquid	Inlet	5-4			
		Outlet	5-5			
3	Vapor	Inlet	5-2			
		Outlet	5-3			
	Liquid	Inlet	5-4			
		Outlet	5-5			
4	Vapor	Inlet	5-2			
		Outlet	5-3			
	Liquid	Inlet	5-4			
		Outlet	5-5			

** If the container does not provide an opening for the specific function listed, enter 0 (zero) in columns E and F corresponding to that row.

If, in Form 5.3, any one of the numbers in column F is less than the number in Column E of the corresponding row, these items must be addressed and brought into compliance with the specific edition of NFPA 58 that the facility was constructed to.

Note: Container appurtenances shown are illustrative of product control equipment only. See NFPA 58 for all container appurtenances required. Illustrations are not intended to be used for system design purposes.

Figure 5-2: Vapor Inlet Appurtenances on Containers of Water Capacity Greater Than 2,000 gallons

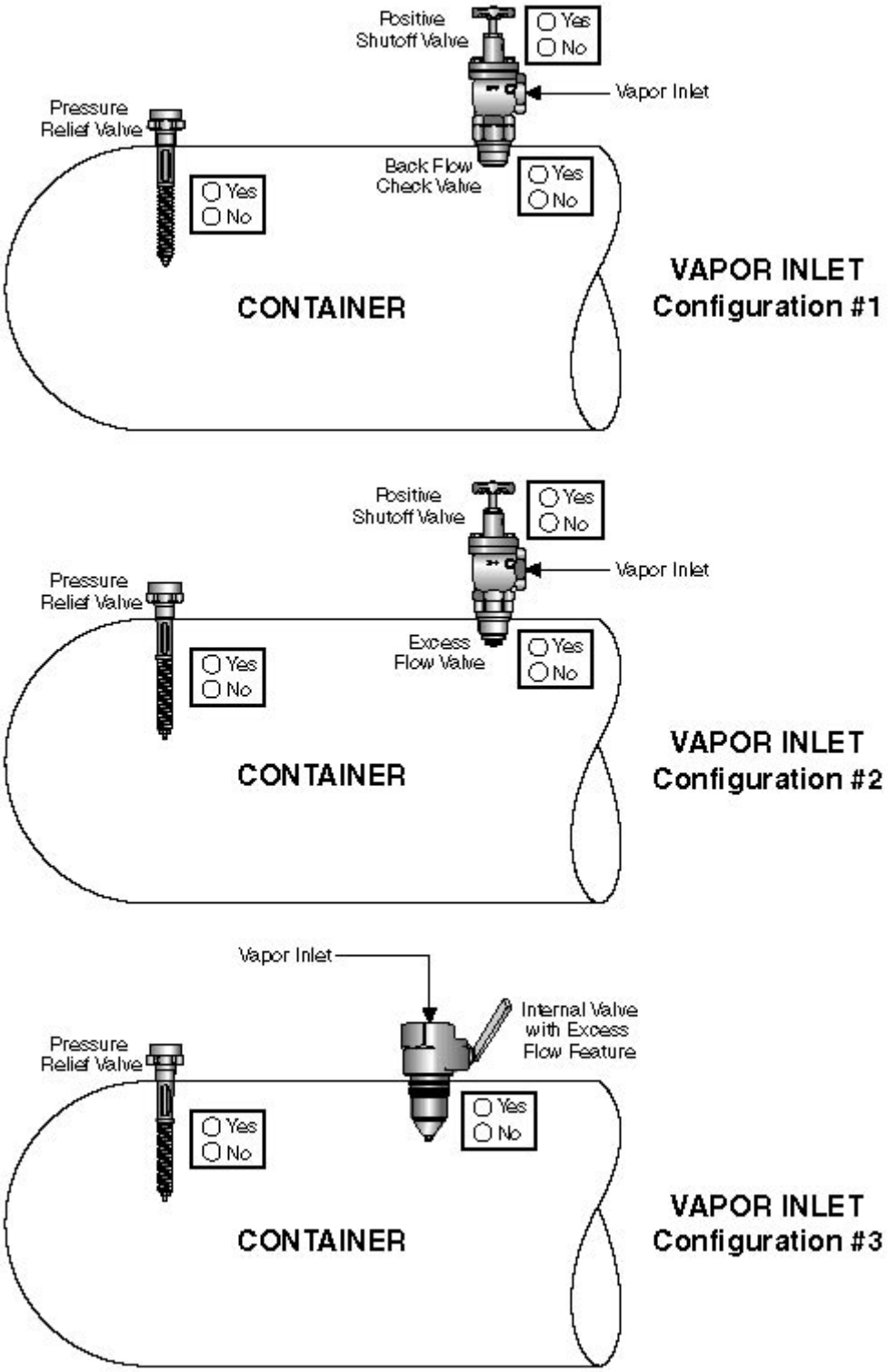

Figure 5-3: Vapor Outlet Appurtenances on Containers of Water Capacity Greater Than 2,000 gallons

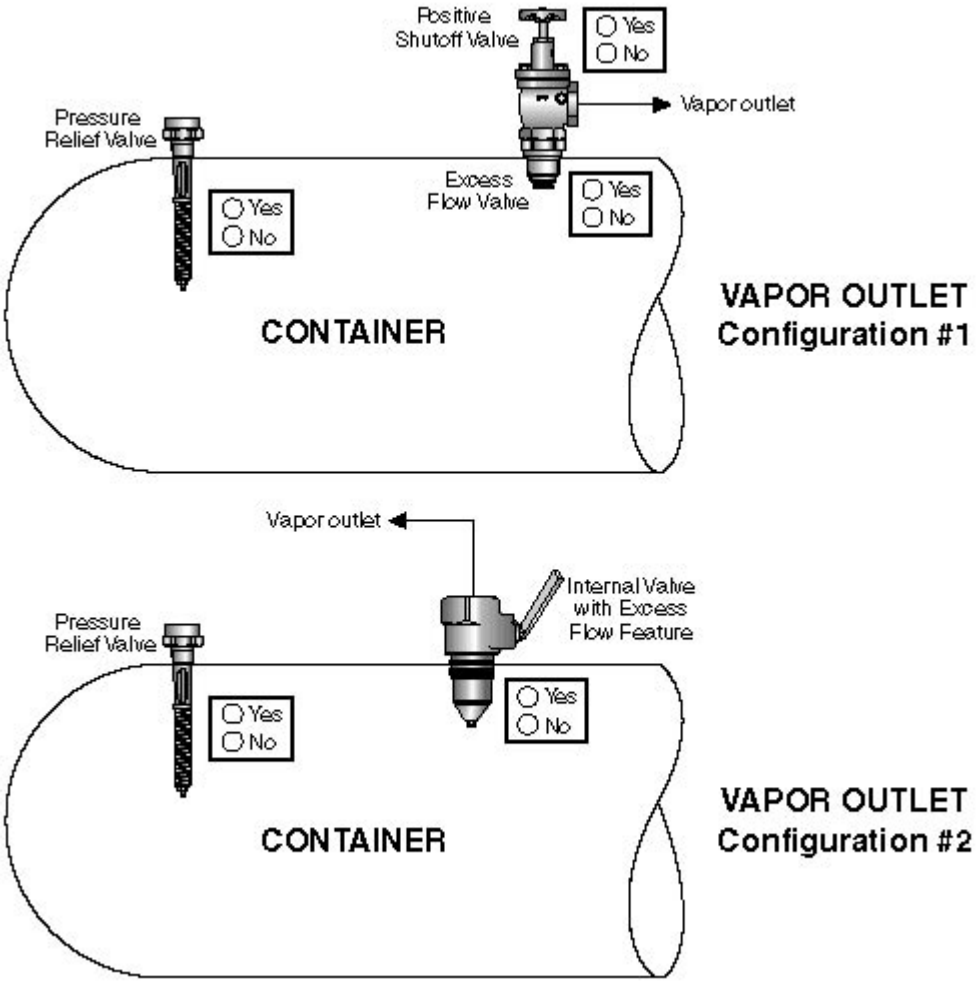

Figure 5-4: Liquid Inlet Valves on Containers Greater than 2,000 through 4,000 Gallons Water Capacity

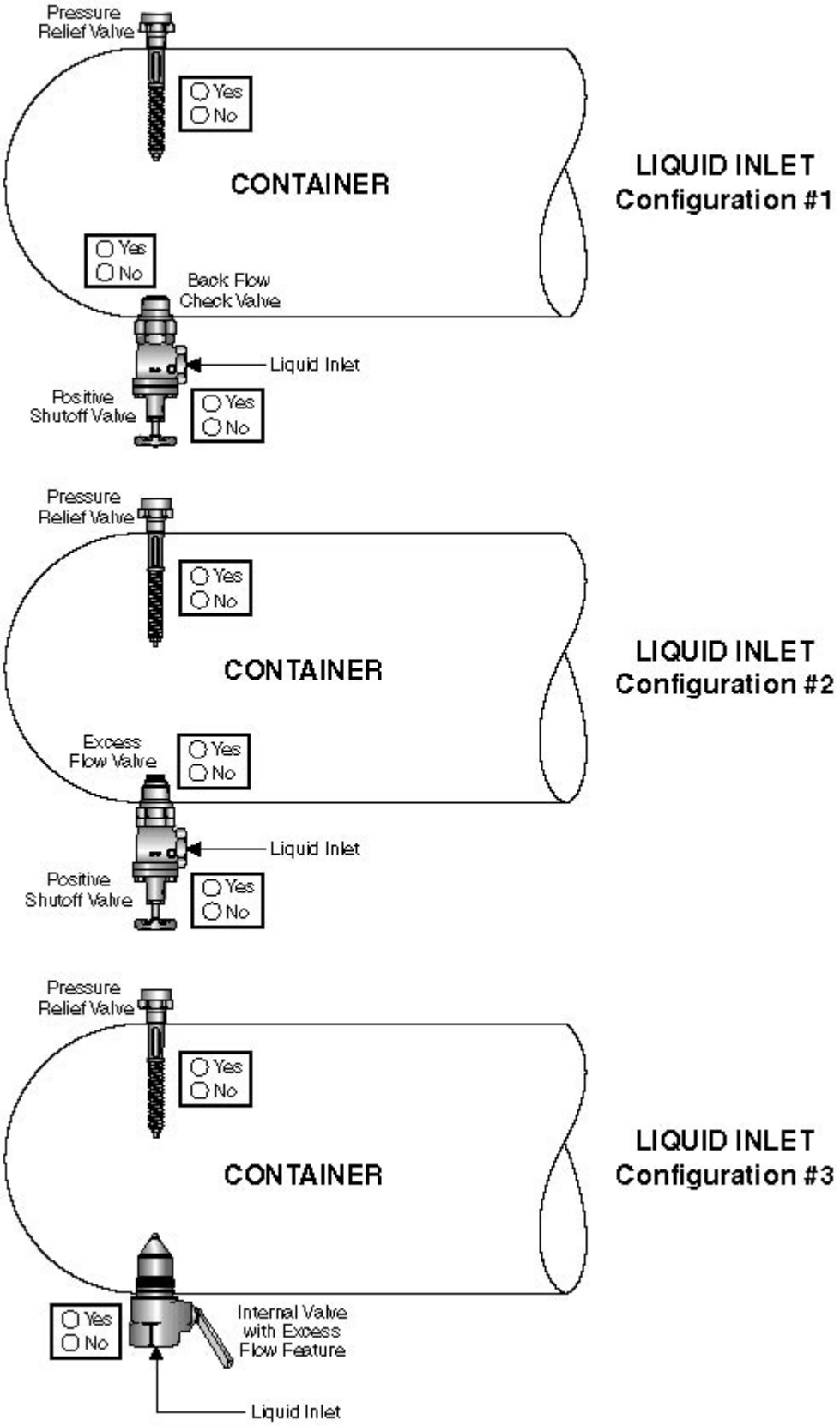

Figure 5-5: Liquid Outlet Valves on Containers Greater than 2,000 through 4,000 Gallons Water Capacity

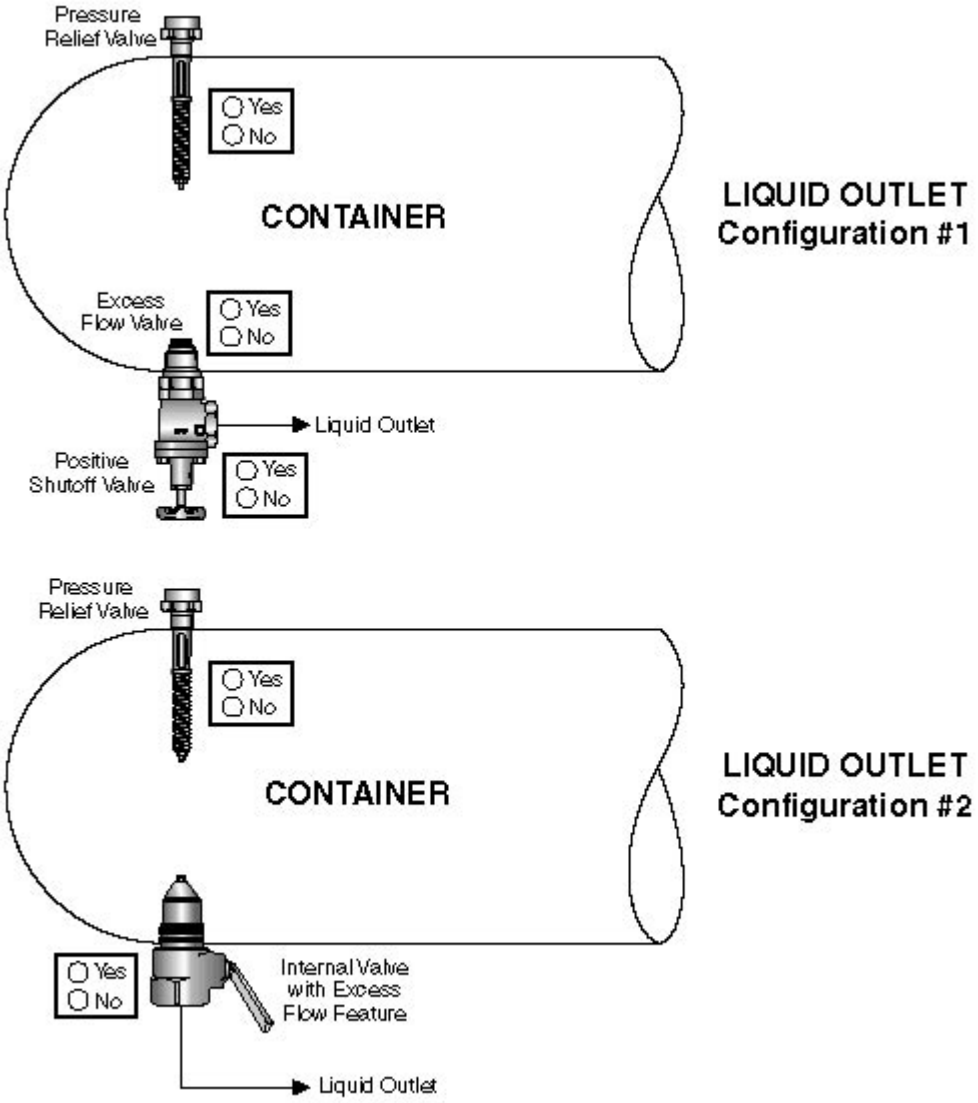

5.1.3 Individual Containers Having a Water Capacity Greater than 4,000 Gallons used in Bulk and Industrial Facilities

The product control appurtenances for containers larger than 4,000 gallons water capacity are similar to those for the more than 2,000 through 4,000 gallon water capacity containers. However, there are retrofit requirements for existing containers without internal valves in liquid service that must be completed by July 1, 2011.

The compliance with the Code requirements for appurtenances in this container size range must be evaluated for LP-Gas flow both into the container (vapor and liquid) and out of the container (vapor and liquid). Several different appurtenance service configurations meet these requirements. These are indicated in Form 5.4. *Note: Container appurtenances shown are illustrative of product control equipment only. See NFPA 58 for all container appurtenances required. Illustrations are not intended to be used for system design purposes.*

Enter the information in Form 5.4 by following the steps indicated below

1 Select the first container in the facility having a water capacity greater than 4,000 gallons. Enter Form 5.4 below in Column A at Container #1.
2 Complete each of the rows identified as the vapor inlet, vapor outlet, liquid inlet and liquid outlet service for this container.
3 For example, address "Vapor Inlet" in Columns B and C for Container #1. Refer to Column E to identify the appropriate reference figure number (Fig. 5-2 in our example) and configuration for the container.
4 Enter in Column E the number of separate appurtenances shown in Fig. 5-2 (two appurtenances are shown for each configuration), which represents the minimum number and type of appurtenances required for the container.
5 In the appropriate reference figure and configuration, mark "YES" or "NO" in each box that is associated with a specific appurtenance, depending on whether or not that specific appurtenance is installed in the actual container under consideration.
6 Count the number of "YES" boxes checked and enter that number into Column F.
7 In a similar fashion, repeat steps 3 through 6 for each vapor or liquid opening in the container.
8 Repeat steps 1 through 7 for each container having a water capacity greater than 4,000 gallons at the facility.

Form 5.4

Compliance with Code Requirements for Appurtenances on Containers Having a Water Capacity Greater Than 4,000 Gallons Used in Bulk and Industrial Facilities

A	B	C	D	E	F	G
Container #	**LP-Gas inlet to and outlet from the container****		**Figure #**	**Total Number of Product Release Control Appurtenances**		**NFPA 58 Section Reference (2001 edition)**
				Required by NFPA 58 (applicable edition)	**Installed on the container**	
1	**Vapor**	Inlet	5.2			3.3.3.6 (a)
		Outlet	5.3			3.3.3.6 (c)
	Liquid	Inlet	5.6			3.3.3.6 (b)(2)
		Outlet	5.7			3.3.3.6 (d)(2)
2	**Vapor**	Inlet	5.2			
		Outlet	5.3			
	Liquid	Inlet	5.6			
		Outlet	5.7			
3	**Vapor**	Inlet	5.2			
		Outlet	5.3			
	Liquid	Inlet	5.6			
		Outlet	5.7			
4	**Vapor**	Inlet	5.2			
		Outlet	5.3			
	Liquid	Inlet	5.6			
		Outlet	5.7			

** If the container does not provide an opening for the specific function listed, enter 0 (zero) in columns E and F corresponding to that row.

If in Form 5.4 any one of the numbers in column F is less than the number in Column E of the corresponding row, these items must be addressed and brought into compliance with the specific edition of NFPA 58 that the facility was constructed to.

Figure 5-6: Liquid Inlet Valves on Containers With Water Capacity Greater Than 4,000 Gallons in New Bulk and Industrial Facilities

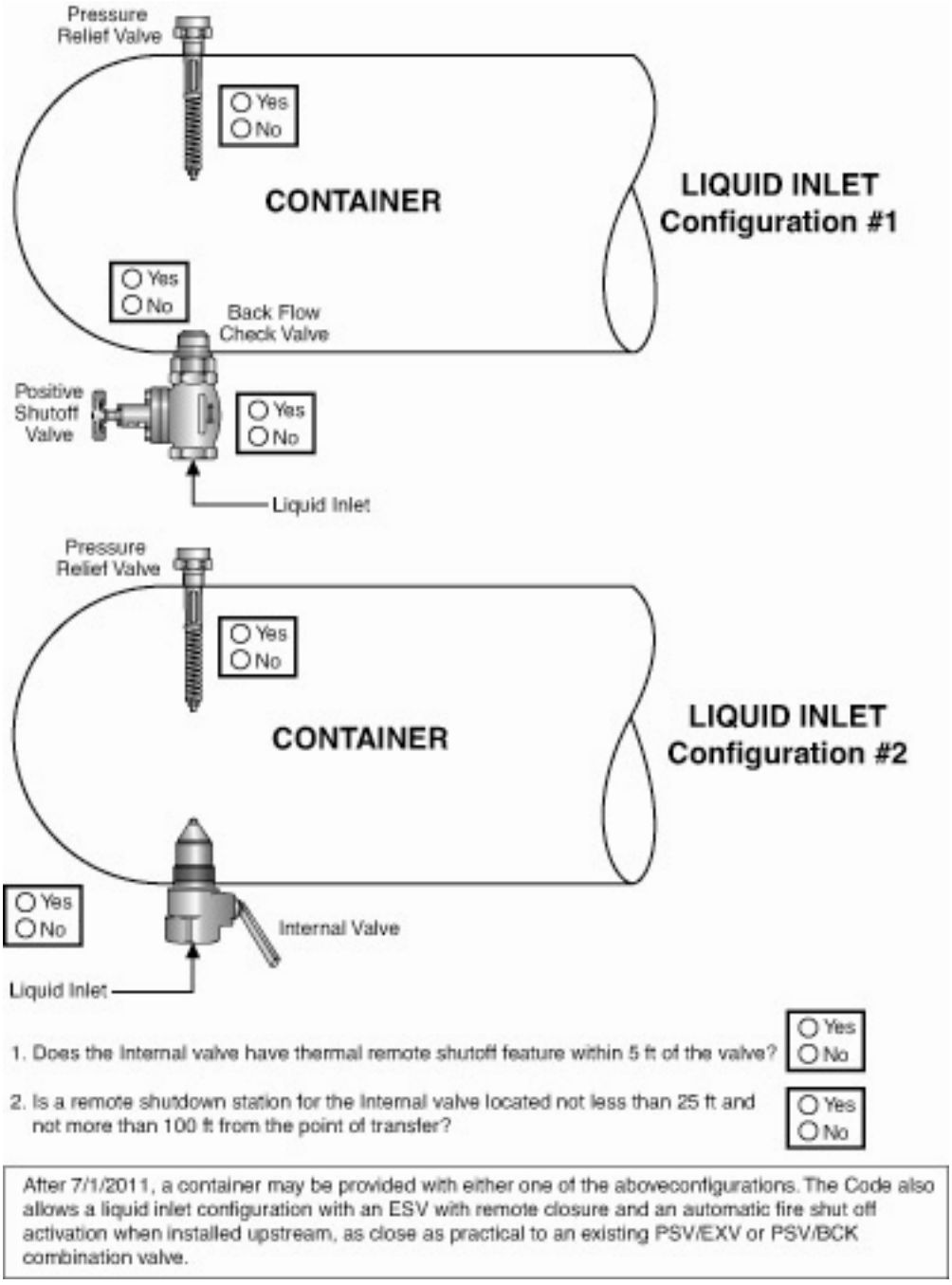

After 7/1/2011, a container may be provided with either one of the above configurations. The Code also allows a liquid inlet configuration with an Emergency Shutoff Valve with remote closure and an automatic fire shutoff activation feature when installed upstream and as close as practical to an existing Positive Shutoff Valve/Excess Flow Valve or Positive Shutoff /Backflow Check combination valve.

Figure 5-6A: Liquid Inlet Valves on Containers With Water Capacity Greater Than 4,000 Gallons in Existing Bulk and Industrial Facilities

(***NOTE: Prior to July 1, 2011, <u>existing</u> installations may utilize Configurations 3, 4 or 5, or either configuration in Figure 5-6. After July 1, 2011, installations must comply with Configurations 4 or 5 below, or Configuration 1 or 2 in Figure 5-6.)***

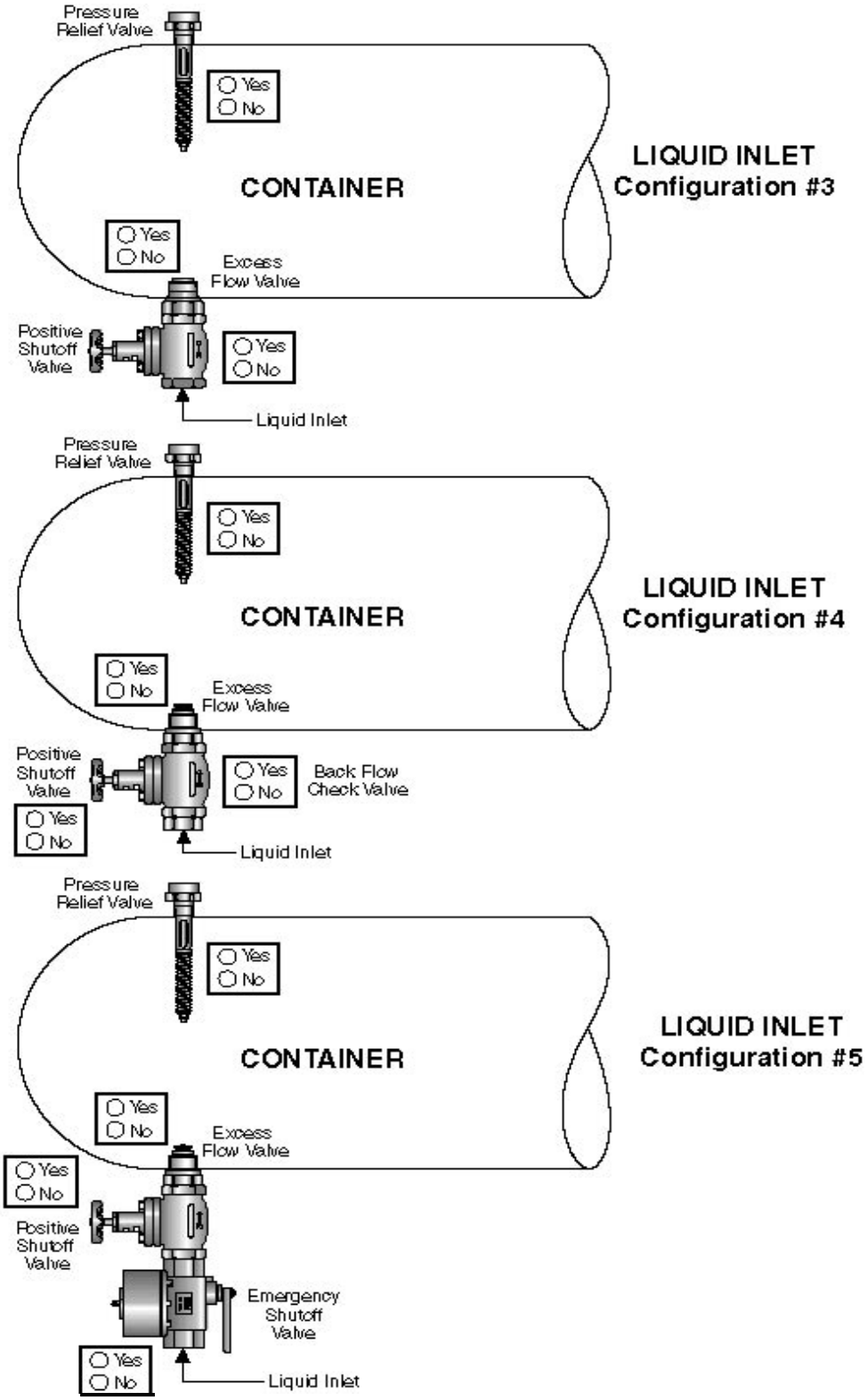

Figure 5-7: Liquid Outlet Valves on Containers with Water Capacity Greater Than 4,000 Gallons in New Bulk and Industrial Facilities

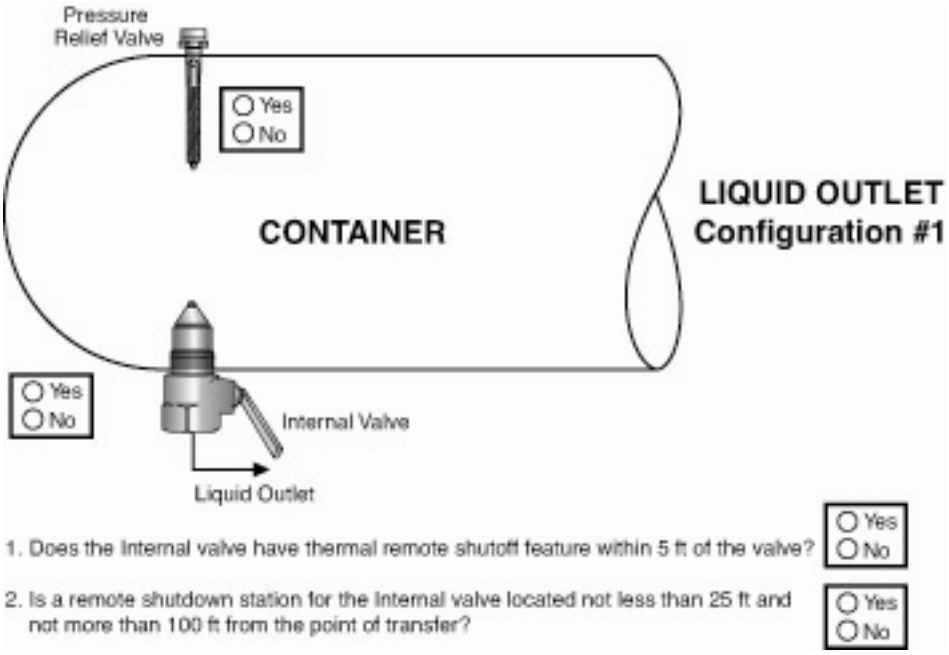

Figure 5-7A: Liquid Outlet Valves on Containers with Water Capacity Greater Than 4,000 Gallons in Existing Bulk and Industrial Facilities

(NOTE: Prior to July 1, 2011, existing installations may utilize Configurations 2 or 3, or Configuration 1 in Figure 5-7. After July 1, 2011, installations must comply with Configuration 3 below or Configuration 1 in Fig. 5-7.)

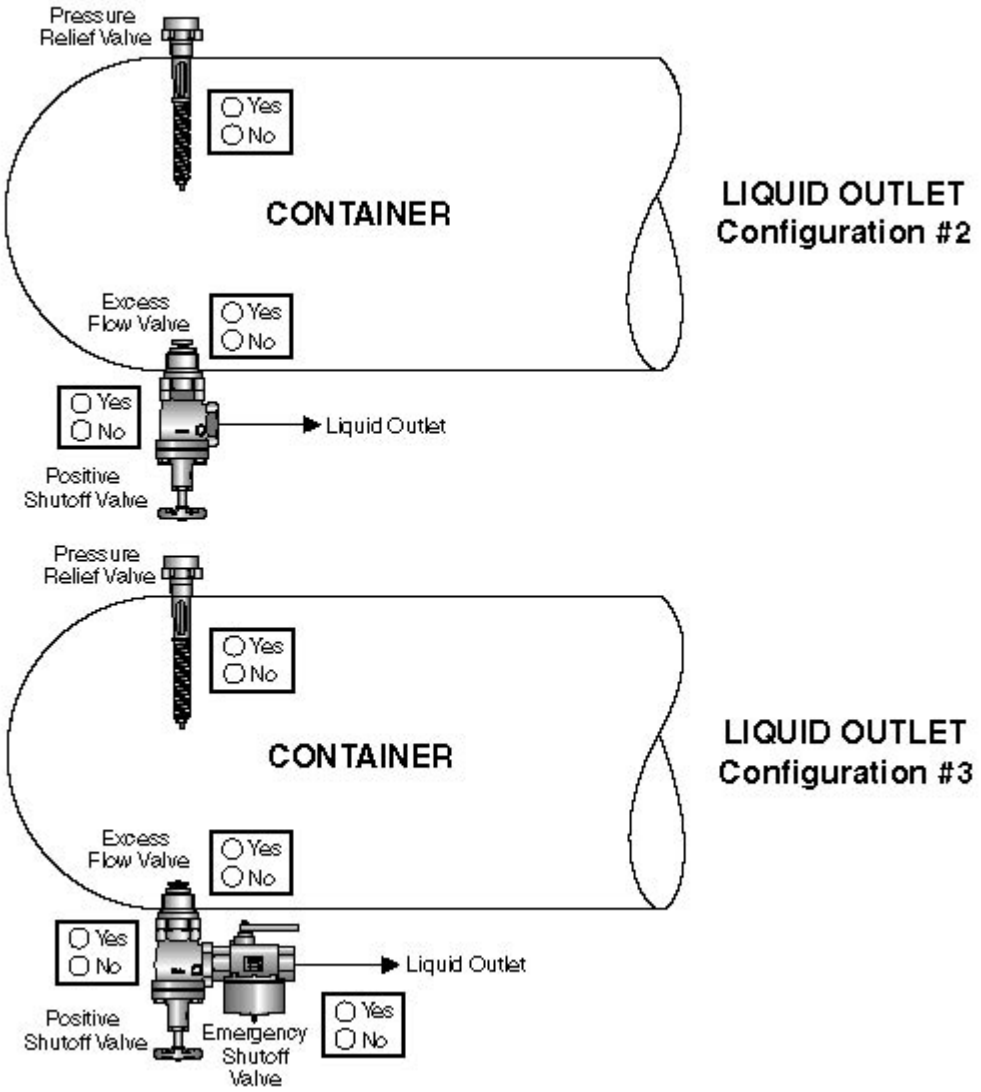

5.2 Product Control Measures in Transfer Piping

5.2.1 Manifolded and Remotely Filled Containers

The containers in some LP-Gas facilities, especially in bulk plants, may be remotely filled with an inlet manifold connected to one or more containers. The vapor withdrawal or liquid withdrawal from containers may also be through a common manifold. In such cases, there are several appurtenance requirements to control the potential release of product.

If the facility contains a liquid transfer line header (manifold) 1½-inch diameter or larger, and a pressure equalizing vapor line that is 1¼-inch diameter or larger, then continue with the analysis in this section by completing Form 5.5, Form 5.6 and Form 5.7. Otherwise, skip this section and go to section 5.3. *Note: Container appurtenances shown are illustrative of product control equipment only. See NFPA 58 for all container appurtenances required. Illustrations are not intended to be used for system design purposes.*

Form 5.5
Requirements for Transfer Lines of 1½-inchDiameter or Larger, Liquid-into-Containers

A	B	C	D	E	F
Item #	**Appurtenance (Either No. 1 or No. 2)****	**Appurtenance Provided with the Feature**	**Installed in the facility?**		**NFPA 58 Section Reference (2001 edition)**
			Yes	**No**	
1	Emergency Shutoff Valve (ESV)	Installed within 20 ft. of lineal pipe from the nearest end of the hose or swivel-type connections.			3.2.19.2
		Automatic shutoff through thermal (fire) actuation with melting point of thermal element < 250 °F			3.2.19.4
		Temperature sensitive element (fusible link) installed within 5 ft from the nearest end of the hose or swivel type piping connected to liquid transfer line,			3.2.19.4
		Manual shutoff feature provided at ESV installed location.			3.2.19.8
		Manual shutoff device provided at a remote location, not less than 25 ft., and not more than 100 ft. from the ESV.			3.2.19.8
		An ESV is installed on each leg of a multi leg piping each of which is connected to a hose or a swivel type connection on one side and to a header of size 1½ inch in diameter or larger on the other side.			3.2.19.3 4.2.3.6(a)
		Breakaway stanchion is provided such that in any pull-away break will occur on the hose or swivel-type connection side while retaining intact the valves and piping on the plant side.			3.2.19.6

Form 5.5 (continued)

A	B	C	D	E	F
Item #	**Appurtenance**	**Appurtenance Provided with the Feature**	**Installed in the facility?**		**NFPA 58 Section Reference (2001 edition)**
			Yes	**No**	
2	Back flow Check Valve (BCK)**	Installed downstream of the hose or swivel-type connection			3.2.19.6
		BCK is designed for this specific application.			3.2.19.2 *Exception*
		A BCK is installed on each leg of a multi leg piping each of which is connected to a hose or a swivel type connection on one side and to a header of 1½ inch in diameter or larger on the other side.			3.2.19.3
		Breakaway stanchion is provided such that in any pull-away break will occur on the hose or swivel-type connection side while retaining intact the valves and piping on the plant side.			3.2.19.6

** The backflow check valve (BCK) is only permitted when flow is only into the container and shall have a metal-to-metal seat or a primary resilient seat with metal backup, not hinged with a combustible material.

Form 5.6

Requirements for Transfer Lines of 1½-inch Diameter or Larger, Liquid Withdrawal From Containers

A	B	C	D	E	F
Item #	**Appurtenance**	**Appurtenance Provided with the Feature**	**Installed in the facility?**		**NFPA 58 Section Reference**
			Yes	**No**	
1	Emergency Shutoff Valve (ESV)	Installed within 20 ft. of lineal pipe form the nearest end of the hose or swivel-type connections.			3.2.19.2
		Automatic shutoff through thermal (fire) actuation with melting point of thermal element < 250 ^{o}F			3.2.19.4
		Temperature sensitive element installed within 5 ft from the nearest end of the hose or swivel type piping connected to liquid transfer line,			3.2.19.4
		Manual shutoff feature provided at E SV installed location.			3.2.19.8
		Manual shutoff device provided at a remote location, not less than 25 ft., and not more than 100 ft. from the ESV.			3.2.19.8
		An ESV is installed on each leg of a multi leg piping each of which is connected to a hose or a swivel type connection on one side and to a header of 1½ inch in diameter or larger on the other side.			3.2.19.3 4.2.3.6(a)
		Breakaway stanchion is provided such that in any pull-away break will occur on the hose or swivel-type connection side while retaining intact the valves and piping on the plant side.			3.2.19.6
		Number of ESV's in liquid withdrawal service			

Note: If more than one ESV is installed in the facility, use one Form 5.6 for each ESV.

Form 5.7
Requirements for Vapor Transfer Lines 1¼-inch Diameter or Larger

A	B	C	D	E	F
Item #	Appurtenance	Appurtenance Provided with the Feature	Installed in the facility?		NFPA 58 Section Reference (2001 edition)
			Yes	No	
1	Emergency Shutoff Valve (ESV)	Installed within 20 ft. of lineal pipe form the nearest end of the hose or swivel-type connections.			3.2.19.2
		Automatic shutoff through thermal (fire) actuation with melting point of thermal element < 250 ^{o}F			3.2.19.4
		Temperature sensitive element installed within 5 ft from the nearest end of the hose or swivel type piping connected to liquid transfer line,			3.2.19.4
		Manual shutoff feature provided at E SV installed location.			3.2.19.8
		Manual shutoff device provided at a remote location, not less than 25 ft., and not more than 100 ft. from the ESV.			3.2.19.8
		An ESV is installed on each leg of a multi leg piping each of which is connected to a hose or a swivel type connection on one side and to a header of 1½ inch in diameter or larger on the other side.			3.2.19.3 4.2.3.6(a)
		Breakaway stanchion is provided such that in any pull-away break will occur on the hose or swivel-type connection side while retaining intact the valves and piping on the plant side.			3.2.19.6

If a checkmark is made in the "NO" column of any one of Form 5.5, Form 5.6 or Form 5.7, then these items must be addressed and brought into compliance with the specific edition of NFPA 58 that the facility was constructed to.

If the LP-Gas facility is provided with REDUNDANT and FAIL-SAFE PRODUCT CONTROL SYSTEM, then continue the analysis below. Otherwise skip section 5.3 and go to Chapter 6.

5.3 Redundant and Fail-Safe Product Control Systems

Facilities may be provided with redundant fail-safe product control measures and incorporate equipment designed for low emissions during transfer operations. These types of (redundant and fail-safe) product control measures and low emission transfer equipment provide additional safety and qualify the facility for the following benefits:

- Reduced separation distances from adjacent properties, and
- Mitigation of the need for special protection requirements.

If the facility incorporates redundant, fail-safe equipment, complete Form 5.8 below. The evaluation will indicate whether the design of the facility complies with the requirements for redundant and fail-safe product control systems. If redundant, fail-safe equipment are not provided, skip this section.

Form 5.8
Evaluation of Redundant and Fail-Safe Design

A	B		C	D	E	F
Item #	Description		Features	Installed in the facility? Yes	Installed in the facility? No	NFPA 58 Section Reference (2001 edition)
1	Container Sizes for which the appurtenances are provided		Redundant Fail-Safe equipment and Low Emission transfer lines are provided for each container of water capacity greater than 2,000 gal through 30,000 gal			3.11
2	LIQUID OR VAPOR WITHDRAWAL (1-1/4 in. or larger)		Internal Valve with integral excess flow valve or excess flow protection			3.11.3.1
			Positive Shutoff Valve installed as close as possible to the Internal Valve			3.11.3.2
3	LIQUID OR VAPOR INLET		Internal Valve with integral excess flow valve or excess flow protection or Back Flow Check valve			3.11.3.3
			Positive Shutoff Valve installed as close as possible to the Internal Valve or the back flow check valve			3.11.3.2
4	Railcar Transfer	Flow Into or Out of Railroad tank car	Internal Valve installed in the transfer hose or the swivel-type piping at the tank car end			4.2.3.6(a)
		Flow Only into railroad tank car	Internal valve or backflow check valve installed in the transfer hose or the swivel-type piping at the tank car end			4.2.3.6(b)

5	Cargo Tank Transfer		Protection provided in accordance with 3.2.19			3.2.19
6	Automatic closure of all primary valves (IV & ESV) in an Emergency		Actuated by Fire Detection			3.11.3.1
			Actuated by a hose pull-away due to vehicle motion			3.11.4.2
7	Manually operated remote shutdown of IV and ESV		Remote shutdown station within 15 ft of the point of transfer?			3.11.4.3(a)
			Another remote shutdown station between 25 ft and 100 ft of the transfer point?			3.11.4.3(b)
			Shutdown stations will shut down electrical power supply, if any, to the transfer equipment and primary valves?			3.11.4.3
			Signs complying with the requirements of 3.11.4.3 (c) provided?			3.11.4.3(c)

Note: If the facility does not have a rail terminal, write the word NA in both the "Yes" column and the "No" column in item 4 of this Form in the railroad tank car row. Similar option is also available if there is no cargo tank vehicle transfer station.

If the LP-Gas facility is provided with LOW EMISSION TRANSFER EQUIPMENT, then continue the analysis below. Otherwise skip section 5.4 and go to Chapter 6.

5.4 Low Emission Transfer Equipment

If the facility is designed with low emission transfer hoses and associated equipment, complete Form 5.9 below. Compliance with Section 3.11.5 of NFPA 58 results in a 50% reduction in the separation distances between transfer points described in Tables 3.2.3.3 and 3.9.4.3. If the facility does not have low emission transfer equipment engineered into the facility design, skip this section.

Form 5.9
Evaluation of Low Emission Transfer Equipment

A	B	C		D	E	F
Item #	Description	Features		Installed in the facility?		NFPA 58 Section Reference
				Yes	No	
1	Transfer into Cylinders or ASME Containers on Vehicles	Delivery Nozzle and Filler Valve- Max. Liquid Release after transfer of 4 cc.	Fixed Maximum Liquid Level Gage not used during transfer operations			3.11.5.1
2	Transfer into Stationary ASME Containers. Delivery valve and nozzle combination	Minimize the liquid product volume released to the atmosphere during product transfer or post transfer uncoupling of the hose	does not exceed 4 cc (0.24 in^3) from a hose of nominal size 1 in or smaller			3.11.5.1(a)
			does not exceed 15 cc (0.91 in^3) from a hose of nominal size larger than 1 in.			3.11.5.1(b)
3	Transfer into Stationary ASME Containers Maximum filling limit	Do containers of less than 2,001 gal (w.c.) have an overfilling prevention device or an other approved device?				3.11.5.2(c)
		Do containers of greater than 2,000 gal (w.c.) have a float gage or other non-venting device?				3.11.5.2(b)
4	Transfer into Stationary ASME Containers Fixed Maximum Liquid Level gauge	Not used during routine transfer operations but used to calibrate other non-venting liquid level gages in the container				3.11.5.1(b)

Note: 1) If the facility does not have a particular feature described in the table, write "NA" in both the "Yes" and "No" columns corresponding its row in item 2.

If a checkmarks are made in the "NO" column of either Form 5.8 or Form 5.9, these items must be addressed and brought into compliance with the specific edition of NFPA 58 that the facility was constructed to.

CHAPTER 6

Analysis of Local Conditions of Hazard

6.1 Physical Protection Measures

LP-Gas facilities must be protected against tampering with systems and appurtenances and from accidental collision of vehicles with containers and/or transfer lines. Requirements to prevent such tampering or accidents are specified in the Code. The facility's compliance requirements are indicated in Form 6.1. Complete all forms in this chapter.
(**NOTE:** See NFPA 58 for complete requirements.)

Form 6.1
Evaluation of Physical Protection and Other Measures

A	B	C	D	E	F
#	Item	Features	Installed in the facility?		NFPA 58 Section Reference
			Yes	No	
1	Lighting‡	Provide lighting for nighttime operations to illuminate storage containers, container being loaded, control valves, and other equipment			3.3.7
2	Vehicle impact protection	Protection against vehicular (traffic) impacts on containers, transfer piping and other appurtenances is designed and provided commensurate with the size of vehicles and type of traffic in the facility. (Example protection systems include but not limited to (1) Guard rails, (2) Steel bollards or crash posts, (3) Raised sidewalks.			2.3.7.2 3.2.15.7
3	Protection against corrosion	Provide protection against corrosion where piping is in contact with supports or corrosion causing substances.			3.2.15.7
Complete only 4A or 4B					
4A	Perimeter Fence	Is an industrial type or chain link fence of at least 6 ft high or equivalent protection provided to enclose (all around) container appurtenances, pumping equipment, loading and unloading and container filling facilities?			3.3.6.1
		Are at least two means of emergency accesses (gates) from the enclosure provided? **NOTE: Write "N.A." (not applicable) if** (i) The area enclosed is less than 100 ft^2, or (ii) The point of transfer is within 3 ft of the gate, or containers are not filled within the enclosure			3.3.6.1 and associated Exception 1
		Is a clearance of, at least, 3 feet all around to allow emergency access to the required means of egress been provided?			3.3.6.1
	Guard Service	If a guard service is provided, does this service cover the LP-Gas plant and are the guard personnel provided with appropriate LP-Gas related training, per section 1.5 of NFPA 58?			3.3.6.1
4B	Lock-in-Place devices	Are Lock-in-Place devices provided to prevent unauthorized use or operation of any container appurtenance, system valves, equipment in lieu of the fence requirements above?			3.3.6.1 or 3.3.6.2

Fill only items 1, 2, 3, and 4A or 4B. Leave blank or indicate by "NA" when not filling the "YES" or "NO" column.
‡ Leave blank if the facility is not operated at night.

6.2 Ignition Sources and Control

The potential for ignition of vapors of LP-Gas released in a facility is reduced by eliminating as many ignition sources as possible, designing electrical equipment to reduce or eliminate sparking and ensuring that during transfer operations known ignition sources are turned off. The ignition source control involves both passive methods as well active methods. Form 6.2 is used to evaluate whether your facility satisfies the code requirements for ignition source control. (**NOTE:** See NFPA 58 for complete requirements.)

Form 6.2
Ignition Source Control Assessment

A	B	C	D	E
#	Ignition Control Requirement	Is the Facility compliant?		NFPA 58 Section Reference
		Yes	No	
1	Are combustible materials, weeds and tall grass not closer than 10 ft from each container?			3.2.2.6
2	Is distance at least 20 ft between containers and tanks containing flammable liquids with flash point less than 200 ^{o}F (ex., gasoline, diesel)			3.2.2.6
3	Are electrical equipment and wiring are installed per Code requirements?			3.7.2
4	Are open flame equipment located and used according to Code?			3.7.3
5	Are ignition control procedures and requirements during liquid transfer operations complied with.?			4.2.3.2
6	Is an approved, portable, dry chemical fire extinguisher of minimum capacity 18 Lbs and having a B:C rating provided in the facility?			3.10.2.4
7	Is an approved, portable, dry chemical fire extinguisher of minimum capacity 18 Lbs and having a B:C rating provided on each truck or trailer used to transport portable containers?			6.2.4
8	Is the prohibition on smoking within the facility premises strictly enforced?			4.2.3.2 & 6.3.10

Notes: 1) If there is no flammable or Class II combustible liquid storage in or nearby the facility insert "NA" in both "Yes" and "No" columns of row 2.

2) If there are no electrical equipment or there are no open flame equipment in the facility, then facility insert "NA" in both "Yes" and "No" columns corresponding to the appropriate rows.

6.3 Separation Distances

6.3.1 Separation Distances between Container and Important Buildings, Other Properties and Transfer Points

The separation distance provisions in NFPA 58 are minimum requirements and are intended to buy time in an emergency and to implement appropriate response. The requirements are dependent upon the size of the container. Complete the appropriate section of Form 6.3. (**NOTE:** See NFPA 58 for complete requirements.)

Form 6.3

Separation Distances from containers to buildings, property line that can be built upon, inter-container distances, and aboveground flammable or combustible storage tanks

A	B	C	D	E	F	G
#	Container Size Range in gal (W.C.)	Separation between a property line, important building or other property and the nearest container which is	Minimum Distance (ft)	Is the Facility compliant? Yes	Is the Facility compliant? No	NFPA 58 Section Reference
1	501 through 2,000	Above Ground	25			Table 3.2.2.2
		Underground or Mounded	10			
		Between containers	3			
2	2,001 through 30,000	Above Ground	50			
		Underground or Mounded	50			
		Between containers	5			
3	30,001 through 70,000	Above Ground	75			
		Underground or Mounded	50			
		Between containers	¼ sum of diameters of adjacent containers			
4	70,001 through 90,000	Above Ground	100			
		Underground or Mounded	50			
		Between containers	¼ sum of diameters of adjacent containers			
5	All sizes greater than 125 gal	Separation distance between a LP-Gas container and an above ground storage tank containing flammable or combustible liquids of flash points below 200 °F.	20			3.2.2.6 (e)

Note: If any of the container sizes indicated in the above form are not present in the facility, enter "NA" in both Yes and No columns. Do not count them for compliance with the code.

If the LP-Gas plant is provided with every one of the redundant and fail-safe product control-design equipment indicated in Form 5.8, then the minimum distance in column D of Form 6.3 can be reduced to 10 feet for underground and mounded containers of water capacity 2,001 gal to 30,000 gal.

6.3.2 Separation Distances between Transfer Points and other Exposures

If the liquid transfer point is not on the container but is at a remote location complete Form 6.4.
Do not complete Form 6.4 when the filling is through a container valve.
(**NOTE:** See NFPA 58 for complete requirements.)

Form 6.4
Separation Distances between Points of Transfer and other Exposures

A	B		C	D	E	F	G
#	Type of Exposure within or outside the facility boundary		Check if exposure is present	Minimum Distance (ft)	Is the Facility compliant?		NFPA 58 Section Reference
					Yes	No	
1	Buildings, mobile homes, recreational vehicles, and modular homes with fire-resistive walls			10			Section 3.2.3.2, Table 3.2.3.3
2	Buildings with other than fire resistive walls			25			
3	Building wall openings or pits at or below the level of the point of transfer			25			
4	Line of adjoining property that can be built upon			25			
5	Outdoor places of public assembly, including school yards, athletic fields, and playgrounds			50			
6	Public ways, including public streets, highways, thoroughfares, and sidewalks	From points of transfer in LP-Gas dispensing stations and at vehicle fuel dispensers.		10			
		From other points of transfer		25			
7	Driveways			5			
8	Mainline railroad track centerlines			25			
9	Containers other than those being filled			10			
10	Flammable and Class II combustible liquid dispensers and aboveground and underground containers			20			
11	Flammable and Class II combustible liquid dispensers and the fill connections of LPG containers			10			
12	LP-Gas dispensing device located close to a Class I liquid dispensing device.			10			3.9.4.3

NOTE: Place a checkmark in column C against an exposure that is present in or around the facility. Fill columns E or F for only those rows for which there is a checkmark in column C.

If the facility contains low emission transfer equipment (i.e, all equipment identified in Form 5.9 are installed and are in working order), then the minimum separation distances in column D of Form 6.4 can be reduced to one half of the indicated values.

If the containers in the LP-Gas facility are provided with SPECIAL PROTECTION MEASURES, then continue the analysis below. Otherwise skip section 6.4 and go to Chapter 7. Also see Chapter 9.

6.4 Special Protection

In the event that a proposed installation is adjacent to a property containing an extremely high combustible fuel loading and the location of the storage containers is such that exposure of the containers to a fire on the adjacent property would severely impact the integrity of the containers, special protection methods may be utilized to reduce the exposure hazard to the containers. Installed special protection systems must comply with section 3.10.3 of NFPA 58, which addresses both passive and active protection systems.

- Passive approaches include insulating the outside of the containers, mounding above grade or burying the container.
- Active special protection includes fixed water spray systems or placement of monitor nozzles at strategic locations with respect to the containers to be protected.

Complete form 6.5 to determine compliance of the installation with the Code. Similarly, Form 6.6 indicates the requirements for active protection. This Form also should be completed as part of the fire safety analysis process.
(**NOTE:**. See NFPA 58 for complete requirements.)

Form 6.5
Special Protection Measures – Requirements for Passive Systems

A	B	C	D		E
#	Special Protection Option	Question	Is the Facility compliant?		NFPA 58 Section Reference (2001)
			Yes	No	
1	Container Insulation	Insulation provided on each of the containers?			3.10.3.1
		Insulation material complies with the requirements of section 3.10.3.1 of NFPA 58?			3.10.3.1
2	Mounding of containers	Each container in the facility is mounded?			3.10.3.2
		Mounding complies with each requirement under section 3.2.9.3 of NFPA 58.			3.10.3.2
3	Burying of containers	Each container in the facility is buried?			3.10.3.3
		Buried containers comply with each requirement under section 3.2.9.1 of NFPA 58.			3.10.3.3 and 3.2.9.1

Form 6.6
Special Protection Measures – Requirements for Active Systems

#	Special Protection Option	Question	Is the Facility compliant?		NFPA 58 Section Reference (2001)
			Yes	No	
1	Water spray systems	Are fixed water spray systems, complying with NFPA 15[1] requirements, used for each container in the facility?			3.10.3.4
		Do fire responsive devices actuate water spray system automatically?			3.10.3.4
		Can the water spray systems be actuated manually also?			3.10.3.4
2	Monitor nozzle systems	Are the monitor nozzles located and arranged so that the water stream can wet the surfaces of all containers exposed to a fire?			3.10.3.5
		Can the water stream from a monitor nozzle reach and wet the entire surface of, at least, one half of a length from one end of each of the containers it is designed to protect?			3.10.3.5
		Do fixed monitor nozzles comply with NFPA 15[1] requirements?			3.10.3.5
		Do fire responsive devices actuate the monitor nozzles?			3.10.3.5
		Can the monitor nozzles can be actuated manually also?			3.10.3.5

1. Refer to Chapter 8 for a discussion on NFPA 15 *Standard for Water Spray Fixed Systems for Fire Protection*

CHAPTER 7

Exposure to and from Other Properties, Population Density

7.1 Exposure to off-site properties and persons from in-plant propane releases

Types of Propane Fires: A propane release inside the LP-Gas facility may affect adjacent properties and off-site populations if the release is of a sufficiently large size. An immediately ignited release will result in a local fire. Depending upon the characteristics of the release and ignition two types of local fires can occur, namely, a pool fire on any liquid pool of propane on the ground or a burning rising fireball.

If the released propane is not immediately ignited, then a dispersing cloud (or plume) of vapor will form. The cloud or plume will move in the direction of the wind. Because of the mixing of air with the dispersing propane, propane concentration decreases continuously both with downwind distance as well as in the cross-wind direction. This cloud or plume can be ignited at any distance downwind by an ignition source when the concentration at the point of ignition is within the Lower Flammability Limit (LFL) to Upper Flammability Limit (UFL) range. For propane this concentration of propane is between 2.15% and 9.6% by volume in air, respectively.

Ignition of a dispersing vapor cloud or plume may result in a flash-back type of vapor fire. In extremely rare cases, and only when the physical conditions are conducive, will a vapor explosion occur, resulting in a blast wave. If the dispersing cloud is not ignited it poses no hazard to the surrounding area.

Hazardous Effects: The effect of a propane fire on an off-site property will depend on the type and material of construction of the structure and its distance from the fire and fire size. Similarly, the number of off-site persons adversely impacted by a fire in a LP-Gas facility will also depend on, (in addition to the characteristics of the fire and the distance between the fire and the population) the type of population, the timeliness of notification, the effectiveness of the evacuation planning and implementation, etc.

Release Models: A number of credible propane release models in LP-Gas facilities were developed for assessment in this manual. Each potential release has very low probability of occurrence. However, because of the flammability of propane, such releases may pose hazards. The hazard distance (to a property outside the facility boundary or to off-site persons) from a propane release within the facility will depend on the size and duration of release, and the type of fire that occurs.

The distance to which a hazard extends under each scenario of release and for each hazard behavior was calculated. These results are indicated in Table 7.1. Complete Form 7.2 using the results indicated in Table 7.1.

Table 7.1
Distances to Various Types of Propane Hazards Under Different Release Models**

Model #	Details of the Propane Release Model Releases from or due to		Vapor Dispersion Distance to LFL (ft)	Explosion Hazard Distance (ft)	Fire Ball Radiation Distance (ft)
1A	Bobtail hose failure. Release of the entire inventory in the hose, quickly.	1" ID x 150 ft hose length	250	110	50
1B		1" ID x 120 ft hose length	230	103	45
1C		1" ID x 75 ft hose length	190	90	40
2	Release of the inventory in a transfer piping 1" x 30 ft + @ 20 gpm for 10 min., due to failed excess flow valve.		135	120	25
3	Release from the container pressure relief valve		No ignitable vapor concentration at ground level		
4	Release from a 1" ID x 150 ft transfer piping to a vaporizer and reduced flow from a partially open excess flow valve @ 20 gpm for 10 min.		250	120	50
5	Leak from a corrosion hole in a transfer pipe at a back pressure of 130 psig (corresponding to 80 ^{o}F) for 60 min. Hole size is ¼" ID.		110	120	5
6	Release of the entire inventory in a 2" ID x 20 ft., transfer hose.		195	90	40
7	Transport hose blowdown: Hose size 2" ID, 20 ft length release for 3min., from a Transport after the tank is filled.		75	30	<5

** Results from models described in Appendix B. The results are rounded to the nearest 5 feet.

Form 7.1
Types of Occupancies[1] Near or Surrounding the LP-Gas Facility

Type of Occupancies	Model from Table 7.1 [2]	Is an Occupancy located within the hazard distance from the Facility?	
		Yes	No
Assembly Occupancies (Places of worship, Libraries, Theaters and Auditoriums, Food or Drink Bars, Sports Stadiums, Amusement Parks, Transportation Centers, etc. with 50 or more people).			
Institutional Occupancies (Elderly Persons Home or Nursing Home, Hospitals, Alcohol & Drug Rehabilitation Centers, Prisons)			
Educational Occupancies (Elementary Schools, Day Care facilities, etc).			

NOTES: (1) See Glossary for the definitions of occupancies (Ref: NFPA 5000)

(2) Table 7.1 provides a number of scenarios that can result in propane release, and the resulting area exposed for different ignition mechanisms. Determine the scenarios that are applicable to the facility, for the quantities that can be released. Use the hose diameters and length that will be used at the facility if they differ from the ones in Table 7.1 and recalculate the hazard distances using a spreadsheet method that is available at npga.org. Some scenarios may not be applicable to an installation based on other mitigation measures taken, such as a hose management procedure to minimize the possibility of hose failure.

7.2 Exposure to the propane facility from external events

A large fire or an explosion occurring outside the facility boundary, the facility equipment, containers or electrical systems may have detrimental effects. The most likely scenario is that the LP-Gas facility equipment is affected by direct fire thermal radiation.

In order to assess the effects of in-plant releases due to off-site hazard exposure to the facility, its equipment and personnel, it is necessary to:

1. Note the type of occupancies surrounding the facility, and
2. Describe in detail the characteristics and density of the population surrounding the facility.

It is also important to discuss with owners of other facilities or operations surrounding the LP-Gas facility, any potential detrimental effect of their presence or operations upon the LP-Gas facility. Suitable precautions may need to be implemented to minimize the potential detrimental effects on a proposed LP-Gas facility from surrounding operations.

The description of the LP-Gas facility surroundings was specified in Form 4.2. Form 7.2 should be completed as a part of the Fire Safety Analysis to note any outside hazards that may affect the integrity of the LP-gas system.

An evaluation of the effects of thermal radiation from fires outside the facility was conducted to provide guidance to those using this manual. Thermal radiation from a very severe fire was evaluated for the effect on the surface temperature of propane containers of various sizes.

- The fire used for the modes was an LNG pool fire, which is highly radiative, greater than building, tire, forest, and other flammable liquids fires.
- A fire diameter of 100 ft was used for a duration of 30 minutes. This is a very large fire.
- The edge of the fire was located at distances to buildings required by Table 3.2.2.2 of NFPA 58.
- Convective cooling of the heated surface was included.

It was found that the maximum temperature of the container surface in contact with vapor was as follows:

Container Size Gal. wc	Maximum Temperature
1,000	478 ºF
2,000	346 ºF
4,000	345 ºF
12,000	345 ºF
18,000	339 ºF
30,000	329 ºF
60,000	260 ºF

The softening point of the steel of a propane tank is above 800 ºF. Based on this, there is no threat of propane tank failure from thermal radiation where the distances to buildings in NFPA 58 are followed.

Form 7.2
Exposure to LP-Gas Facility from External Hazards

A	B	C	D
Item #	**Type of Neighboring Operation**	**Hazard exist s to the LP-Gas Facility**	
		YES	**NO**
1	Petroleum and other hazardous material storage, wholesale dispensing, etc.		
2	Metal cutting, welding , and metal fabrication		
3	Industrial Manufacturing that can pose external hazards		
4	Ports, rail yards and trans-shipment terminals handling flammable and explosive materials.		
5	Other operations that may pose hazards (Gasoline and other hazardous material dispensing stations, fertilizer storage, etc).		

NOTE: If a particular activity indicated in column B does not exist, fill both "YES" and "NO" columns with "N/A."

Where a "YES" has been checked in either Form 7.1 or Form 7.2:

1) For an existing facility, communicate this information to local emergency responders for inclusion in their emergency planning.
2) For a proposed facility, implement the actions indicated in Chapter 9.

CHAPTER 8

Evaluation of Fire Services and Water Supply Requirements

In this chapter the procedure for evaluating the capability and resources of the local fire department (FD) that would respond to an emergency at the LP-Gas facility is discussed. This evaluation includes the training of FD personnel, availability of suitable fire apparatus and equipment, and determination of water requirements if such a system were to be installed at the facility.

8.1 Details of the Fire Service

Use Form 8.1 to record the relevant data on personnel and resources from the local Fire Department (FD) or fire company that is responsible for the area where the LP-Gas facility is located. This is a good opportunity to establish a working relationship with the fire department as you will need their support as you go forward with this planning and evaluation process and they will need to understand the facility to provide maximum assistance should an incident occur at the facility.

Analyzing the data from Form 8.1

Whether fire fighters are career or volunteer has no bearing on the expertise of the company. The purpose of items 4 and 5 is to help determine how fast initial help might be available. Career fire fighters are in the station and available to respond. Volunteer fire fighters may have to come from home or their place of business. Career fire fighters can normally have a piece of fire apparatus responding within one minute of receiving the call, volunteers may take 4-5 minutes to reach the station before they can respond.

Question 6 helps determine the level of skill of the fire fighters in the fire department. NFPA 1001, *Standard for Fire Fighter Professional Qualifications*, defines the expertise required of a firefighter to be qualified to Levels I and II. A Level I firefighter can do general fire fighting tasks under close supervision and a Level II firefighter can do those and more tasks under general supervision.

Question 7A is critical to determining if an effective operation can be conducted. For fighting a fire, at least two firefighters are required for each 125 gpm hose line used. In addition, an incident commander, a safety officer, additional supervisory officers (depending on the size of the incident), and an operator for each piece of fire apparatus that is being used (pumping or performing some other function) is required. Also required is a rapid intervention crew (RIC) of 2 firefighters when the first firefighting crew is deployed into a hazardous area, with that team growing to 4 firefighters when the second and subsequent crews enter the hazardous area. The role of the RIC is to perform a rescue of one or more firefighters that may be injured during the operation.

Question 7B and 7C help determine the training and knowledge of the fire fighters in hazardous materials and the specific hazards of LP-Gas. NFPA 472 is *Standard for Professional Competence of Responders to Hazardous Materials Incidents*.

Form 8.1

Data on the Responding Fire Department

A	B		C
Item #	**Data Item**		**Data Entry**
1	Name of the Fire Department (FD).		
2A	Name of the person in the FD assisting with the data acquisition.		
2B	Position of the person in the FD assisting with the data acquisition.		
3A	Date on which FD data was collected.		
3B	Name of the person collecting the data.		
4	Number of firefighters on duty at any time.		
5	Average number of firefighters available for response.		
6A	Number of firefighters qualified to	"Firefighter I" level.	
6B		"Firefighter II" level.	
7A	Number of firefighters who would	respond on the first alarm to the facility.	
7B		respond on the first alarm and who are qualified to the operations level requirements of NFPA 472 or local requirements	
7C		respond on the first alarm with specific knowledge and training on the properties of LP-Gas and LP-Gas fires.	
8A	Number of fire apparatus that have the capability to deploy a 125 gpm hose line supplied by onboard water for at least 4 minutes, and	that are in service in the department.	
8B		that would respond on a first alarm.	

Question 8 helps determine the capability of fire apparatus that will or could respond to an incident. A 125 gpm hose line is a typical hose line used for firefighting where the fire fighters are expected to advance and maneuver the line while it is flowing.

Response time

Another important consideration of the effectiveness of the Fire Department to respond to an incident is the time it takes the FD to reach the LP-Gas facility. Many fire departments have multiple fire stations or use mutual aid fire companies from other communities to assist them so resources are coming from different locations. It is therefore important to determine the total time for not only the first apparatus but for subsequently arriving apparatus as well. You will need to work with the fire department and gather this information as well.

Using Form 8.2, determine the time for all resources that would be dispatched to an emergency at the facility. Start by identifying and listing in column A the fire companies that would respond on a first alarm to an emergency. Then for each company, record the time it would take to receive and handle an alarm, for the company to turnout, and the time to respond. If the fire department does not have data that can help, some good averages to use are:

- **Alarm Receipt & Handling Time** - 1 minute for the fire department first receiving the alarm and 3 minutes for mutual aid fire departments,
- **Turnout Time** - 1 minute if the apparatus is staffed by career fire fighters and 4 minutes if the apparatus is staffed by volunteer fire fighters,
- **Travel Time** - 2 minutes for each mile the fire apparatus must travel in an urban/suburban setting and 1.5 minutes for each mile the fire apparatus must travel in a rural setting.

Total the times in columns B, C, and D for each company and enter the sum in Column E. This response time will give you an idea of how long it will take resources to reach the facility gate. Fire fighters must then determine the nature and severity of the emergency, determine how they are going to deal with the emergency, maybe establish a water supply from a hydrant or other source, and implement their attack. This can take anywhere from a couple of minutes to upwards of 30 minutes.

8.2 Water Needs and Availability

The requirements for water to cool a container exposed to a fire are indicated in NFPA 15. A flow rate of 0.25 gpm/ft^2 is specified as being adequate to cool a LP-Gas container exposed to a fire. Since a majority of the containers in the LP-Gas facilities have container penetration for liquid inflow or liquid outflow at only one end of the container and since any product leak occurring at one end and a subsequent fire will affect only the end zone of a container, it has been assumed that the container surface within only one half length of the container needs to be cooled for an effective prevention of damage to the container. Also, calculate the total volume of water required on the basis of a stream flow time of 10 minutes.

Based on these parameters and the surface area of various size ASME containers, the cooling water rate requirements for each container size are determined using Form 8.3. Complete Form 8.3 with information relevant to the facility. Start by identifying the largest container at the facility. Assume that a fire occurs at the end of that container where the appurtenances for product inflow and outflow are located, and determine whether other containers are within 50 feet of this largest container.

After identifying the largest container at the facility and all stationary containers within 50 feet of the largest container, record in column F of Form 8.3 the largest container. Next, record in Column F the two containers that are within 50 feet of the largest, **and** which have the most surface area exposed to the end of the largest container at which the appurtenances are installed. These are the containers which are most likely to be affected by a fire occurring at the appurtenances of the largest container. Multiply the number of containers recorded in Column F by the required water flow rate per container in Column E and enter the result in Column G. Sum the values in Column G and enter the sum in Cell 2a, Column G. Round this number up to the next multiple of 125 (i.e. 725 gpm would round up to 750 gpm). This is done because the

application of water by the fire department is generally going to be in increments of 125 gpm. Enter that figure in Cell 2b, Column G.

You have now determined the application rate for cooling water that is necessary if the largest container is subjected to fire. Add 250 gpm (Cell 3, Column G) to that for use by firefighters to protect personnel when approaching the container or its valves to control the flow of product. Sum the numbers in Cells 2b and 3 of Column G Enter that number in Cell 4, Column G.

To determine the total volume of water required for a 10 minute application time, multiply the total water flow rate in Cell 4, Column G by 10 and enter that figure into Cell 4, Column H.

Form 8.2

Response Time data for the Fire Departments

A	B	C	D	E
Company or Department	**Time in Minutes for**			
	Alarm Receipt & Handling	**Turnout**	**Travel**	**Total Time**

Note: Number in Column E = Sum of numbers from Columns B through D.

Form 8.3

Water Flow Rate and Total Water Volume Required to Cool Containers Exposed to a Fire

A	B	C	D	E	F	G	H
Item #	**ASME Container Size (gallons)**	**Total Surface Area of each Container[i] (ft^2)**	**Surface Area of each container to be Cooled (ft^2)**	**Water flow rate required per container (gpm)**	**Number of containers of the size indicated**	**Total Water flow rate required‡ (gpm)**	**Total volume of water required for 10 min (gal)**
1	500	86	43	10.8			
	1,000	172	86	21.5			
	2,000	290	145	36.3			
	4,000	374	187	46.8			
	6,500	570	285	71.3			
	9,200	790	395	98.8			
	12,000	990	495	123.8			
	18,000	1,160	580	145.0			
	30,000	1,610	805	201.3			
	45,000	2,366	1,183	295.8			
	60,000	3,090	1,545	386.3			
	90,000	4,600	2,300	575.0			
	Other Size						
2a	Calculated water flow rate for container protection						
2b	Water flow rate rounded up to nearest multiple of 125						
3	Water for firefighter protection, if required					250	
4	Total water rate and volume						

Note: Column D = (1/2) x Column C Column E = 0.25 (gpm/ft^2) x Column D ;

Column G = Column F x Column E Column H = 10 x Column G

Line 2, Column G and Column H are the sum of numbers in each row above line 2 of each column.

Line 4, Column G and Column H are the sum of numbers in rows 2 and 3.

‡ Consider only 3 containers for water supply evaluations even if the number of containers in a group is more than 3.

[i] ASME container dimensions obtained from www.standby.com/products/storage_tanks.html

The total water requirement for the facility is indicated in item 4, column G (water flow rate) and column H (total water volume or quantity) of Form 8.3. If multiple groups of containers are present in the facility, repeat the calculations in Form 8.3 for each group of containers. The total water requirement for the facility is the largest value for any single group of containers.

Water Availability Evaluation

If a water system is installed, Form 8.3 calculates the total water requirement for a 10 minute duration. This time period allows for manual shutdown, rescue of any injured, and the possibility of dispersing unignited gas.

If there is a public or private water supply with hydrants available within 1000 feet of the facility gate, determine the available flow rate from that system with 20 psi residual pressure. The water company may have flow test data or it may be necessary to conduct flow tests. If that flow rate is equal to or greater than the needed flow rate determined using Form 8.3, you can assume your water supply is adequate.

If the hydrant flow rate is less than the needed flow rate, determine what other sources of water are available. Sources fall into two categories: water on fire apparatus responding to the incident, and water in rivers, ponds or lakes near the facility. Start by talking with the fire department about whether they have a tanker shuttle capability. Some departments have well-organized operations that can deliver 250 gpm or more on a continuous basis using tanker shuttles. This may be the only capability available or it may be a supplement to a weak hydrant system. Be sure to determine how long it would take to get the water shuttle established.

If there is a river, pond or lake in the area, the fire department may be capable of drafting from that water source and pumping water through hose lines to the facility. There are a number of things that need to be considered before relying on this type of water supply.

1. Can a fire apparatus get close enough to the water source to reach the water with the suction hose it carries (normally 20 feet) and not have the lift (distance from the surface of the water to the center of the pump) greater than 10 feet?
2. Is the water source available year round? Does it dry up in the summer or freeze in the winter? The strainer on the suction hose needs to be at least 2 feet below the surface of the water.
3. Is the water source of adequate size or flow to supply the water needed?
4. Does the fire department have the hose and pumping apparatus to relay the water from the source to the fire?
5. How long will it take to set up this relay?

These factors should be evaluated and discussed with the fire department before any decision is made to use such a supply. It might also be useful to have the fire department conduct an actual timed drill to deliver the needed water supply to the facility site using the normally responding complement of personnel and equipment.

Complete Form 8.4 to document the water supply that will be available to the facility site.

Form 8.4

Evaluation of Water Availability in or Near the LP-Gas Facility

A	B	C	D		
Item #	**Water from**	**Available?**	**Quantitative information**		
1	Public supply or from another piped-in supply through one or more fire hydrants in or near the facility	☐ Yes ☐ No	Hydrant data	Distance from Facility gate (feet)	Available water flow rate from all hydrants[1] (gpm)
			Hydrant 1		
			Hydrant 2		
			Hydrant 3		
2	A nearby static water source (stream, pond, lake, etc).	☐ Yes ☐ No	Distance to water source = _____ Feet Time to set up relay = _____ min. Rate of delivery = _____ gpm		
3	Only through mobile water tanker shuttle.	☐ Yes ☐ No	Time to set up shuttle = _____ min. Sustainable flow rate = _____ gpm		

NOTE: (1) Obtain the flow rate in each hydrant from the local municipal water authority or the entity that supplies water to the hydrant or conduct a test to determine total available flow rate.

Having the water available does not guarantee that the fire department has the resources to apply the water in a timely manner. Completed Form 8.2 will indicate how much time it will take for the fire department to have initial resources at the facility and how long before additional resources will be on-site. If the capability to apply cooling water within the first 10 minutes of initial fire exposure to the container is not present, extremely dangerous conditions could begin to develop. Note that it will take several minutes after the apparatus arrives at the facility gate before cooling water is actually applied to the containers and that hand held hose lines will be used with water supplied from the water tank on the apparatus. Even if hydrants are available, the staffing on the first arriving fire apparatus will probably not be sufficient to establish a water-supply from the hydrant. Depending on the hydrant system and the fire department's standard operating guidelines, it may be necessary to connect a pumper to the hydrant. If the distance is over 1000 ft. it may also be necessary to use hose from more than one fire apparatus to reach the hydrant and in some cases, to use intermediate pumpers in the hose line to boost the pressure.

Form 8.1 contains information on responding apparatus capable of applying 125 gpm for 4 minutes. This is adequate to begin operations for a single container of 30,000 gallons or less water capacity container if no other adjacent containers are exposed to the fire. However, a continuous water supply then has to be established within that 4 minutes or other apparatus must be available with onboard water to continue the cooling until a continuous water supply is set up. A larger facility or multiple containers exposing each other is a different situation. In those cases, cooling water may need to be applied using larger hand held hose lines or ground monitors to achieve the reach necessary with the water stream. Both of these require considerably more water than may be supplied by 125 gpm hose lines and need to be supplied by a hydrant system, a relay operation from a static water source, or a sustainable tanker shuttle operation.

Using the data you have gathered, it is recommended that you discuss with the fire department the resources available to protect the facility. This would include evaluating the knowledge and training of the fire fighters who would be arriving at the facility.

---

1) For an existing facility, communicate this information to local responders for inclusion in their emergency planning.
2) For a proposed facility, refer to Chapter 9.

CHAPTER 9

Evaluation Summary for a Proposed New LP-Gas Facility

In this chapter the results of analyses performed in Chapter 4 through Chapter 8 for a proposed (new) LP-Gas facility are summarized. If noncompliance with NFPA 58-2001 is found, the design must be altered to bring the proposed facility into compliance. In some cases, several alternative approaches for complying with the Code are presented.

Complete Form 9.1, Form 9.2 and Form 9.3 (and if necessary, Form 9.4 and Form 9.5) and implement any necessary changes to the design to bring the new facility into compliance with the Code.

Form 9.1
Analysis Summary on Product Control and Local Conditions of Hazard

A	B	C	D	E
Item #	**CHAPTER Title**	**Section & Title**	**Reference FORM #**	**Number of "NO" checked§**
1	Product Control Measures in Containers & Transfer Piping	5.1: Product Control in Containers	5.1 or 5.2 or 5.3 or 5.4	
		5.2 Product Control in Transfer Piping	5.5	
			5.6	
			5.7	
			5.8	
			5.9	
2	Analysis of Local Conditions of Hazard	6.1 Physical Protection Measures	6.1	
		6.2 Ignition Source Control	6.2	
		6.3.1 Separation distances; Container and outside exposures	6.3	
		6.3.2 Separation distances; Transfer points and outside exposures	6.4	
		6.4 Special Protection Measures	6.5	
			6.6	

§ The number of "NO" for Forms from Chapter 5 are the difference between NFPA 58-2001 required number of appurtenances and a lesser number actually installed on the container or the transfer piping.

If in any row of column E ("NO") of Form 9.1, the entry number is greater than zero, the proposed LP-Gas facility is not in compliance with the 2001 NFPA 58 Code requirements for product control appurtenances or other safety measures. The design of the proposed facility must be modified to conform to the Code requirements. In addition, the following items should be noted.

- If there are any "NO" checks in Form 6.3, then the separation distance requirements for containers are not satisfied. An option that may be considered is the reduction in separation distance to 10 feet for underground and mounded containers by providing "Redundant and Fail-Safe Product Control Measures." In this case, complete Form 9.4, below to ensure that each requirement of "Redundant and Fail-Safe Product Control Measures" is provided.

- If there are any "NO" checks in Form 6.4, then the separation distance requirements for transfer points are not satisfied. In this case, relocate the transfer points so that the separation distances conform to the code requirements or provide the Low Emission Transfer Equipment. Complete Form 9.5 below and ensure that all requirements for Low Emission Transfer Equipment are fulfilled.

Form 9.2
Analysis Summary on Exposure from and to the LP-Gas Facility

A	B	C	D	E
Item #	**CHAPTER Title**	**Section & Title**	**Reference FORM #**	**Number of "YES" checked**
1	Exposure to and from Other Properties	7.1 Exposure to off-site properties and persons from in-plant propane releases	7.1	
		7.2 Exposure to propane facility from external events.	7.2	

If the entry number in column E ("YES"), Form 9.2 corresponding to Form 7.1 is greater than zero, consider one or more of the following design alternatives.

1 Consider moving the container or the transfer point to a different location, if possible and space exists, so that the property or the person is beyond the hazard distance.
2 Provide "Redundant and Fail-safe Product Control Measures". Complete Form 9.4 to ensure compliance.
3 Institute other technical measures such as installing gas and flame detectors (connected to facility shut down systems), sounding alarm outside facility premises, etc.
4 Institute administrative controls such as additional training for personnel, more frequent inspection of hoses and transfer piping, etc.

If the entry number in column E ("YES"), Form 9.2 corresponding to Form 7.2 is greater than zero, consider one or more of the following design alternatives.

1 Implement procedures to monitor neighboring activity.
2 Install means in the adjacent plant to shut down the LP-Gas plant in case emergency in that plant.

Form 9.3
Analysis Summary on Fire Department Evaluations

A	B	C	D	E	F
Item #	**CHAPTER Title**	**Section & Title**	**Reference FORM #**	**Number "zeros" entered in Lines 6 through 8**	**Number of "Yes" checked in Column C**
1	Fire department capability, adequacy of water supply and Emergency Planning	8.1 Data on the Fire Department	8.1		
2		8.2 Fire response water needs and availability	8.4		

If the entry number in Cell 1, Column E of Form 9.3 is greater than zero, consider one or more of the following design alternatives.

1 Discuss with the local Fire Department the needs of the LP-Gas facility and the evaluation results on the capability and training inadequacies of the Department.
2 Consider developing a cadre of personnel within the LP-Gas facility to respond to emergencies.
3 Institute container special protection system based on active protection approaches or passive approaches. Complete Form 9.6 and Form 9.7 below.

If the entry number in Cell 2, Column F of Form 9.3 is equal to zero, consider one or more of the following design alternatives.

1 Provide special protection (other than water spray or monitor systems) to containers, satisfying the requirements of section 3.10.3 of NFPA Code. Complete Form 9.6 to ensure compliance.
2 Consider implementing the various options indicated in Table 9.1.

Form 9.4
Redundant and Fail-Safe Design for Containers

A	B		C	D	E	F
Item #	**Description**		**Features**	**Proposed for the facility?**		**NFPA 58 Section Reference**
				Yes	**No**	
1	Container Sizes for which the appurtenances are provided		Redundant Fail-Safe equipment and Low Emission transfer lines are provided for each container of water capacity 2,001 gal to 30,000 gal			3.11
2	Liquid or Vapor Withdrawal (1-1/4 in. or larger)		Internal Valve with integral excess flow valve or excess flow protection			3.11.3.1
			Positive Shutoff Valve installed as close as possible to the Internal Valve			3.11.3.2
3	Liquid or Vapor Inlet		Internal Valve with integral excess flow valve or excess flow protection or Back Flow Check valve			3.11.3.3
			Positive Shutoff Valve installed as close as possible to the Internal Valve or the back flow check valve			3.11.3.2
4	Railcar Transfer	Flow Into or Out of Railroad tank car	Emergency Shutoff Valve installed in the transfer hose or the swivel-type piping at the tank car end.			4.2.3.6(a)
		Flow Only Into railroad tank car	Emergency shutoff valve or backflow check valve installed in the transfer hose or the swivel-type piping at the tank car end.			4.2.3.6(b)
5	Cargo Tank Transfer		Protection provided in accordance with 3.2.19			3.2.19
6	Automatic closure of all primary valves (IV & ESV) in an Emergency		By fire actuation			3.11.3.1
			In the event of a hose pull-away due to vehicle motion			3.11.4.2
7	Manually operated remote shutdown of IV and ESV		Remote shutdown station within 15 ft of the point of transfer?			3.11.4.3(a)
			Another remote shutdown station between 25 ft and 100 ft of the transfer point?			3.11.4.3(b)
			Shutdown stations will also turn off electrical power supply, if any, to the valves?			3.11.4.3
			Large letter signs complying with the requirements of 3.11.4.3 (c) provided?			3.11.4.3(c)

Note: If your facility does not have a rail terminal, write the word NA in both the "Yes" column and the "No" column in item 4 of the form in the railroad tank car row. Similar option is also available if there is no cargo tank vehicle transfer station.

Form 9.5
Low Emission Transfer Equipment

A	B	C		D	E	F
Item #	**Description**	**Features**		**Proposed for the facility?**		**NFPA 58 Section Reference**
				Yes	**No**	
1	Transfer into Cylinders or ASME Containers on Vehicles	Delivery Nozzle and Filer Valve-Max. Liquid Release after transfer of 4 cc.	Fixed Maximum Liquid Level Gauge not used during transfer operations			3.11.5.1
2	Transfer into Stationary ASME Containers Delivery valve and nozzle combination	During product transfer or post transfer uncoupling of the hose, liquid product volume released to the atmosphere	Does not exceed 4 cc (0.24 in^3) from a hose of nominal size 1 in or smaller			3.11.5.1(a)
			Does not exceed 15 cc (0.91 in^3) from a hose of nominal size larger than 1 in.			3.11.5.1(b)
3	Transfer into Stationary ASME Containers Maximum filling limit	For containers of size less than 2,001 gal (wc) overfilling prevention device or other approved device is provided.				3.11.5.2(c)
		For a container of capacity greater than 2,000 gal (wc) float gauge or other non-venting device is provided				3.11.5.2(b)
4	Transfer into Stationary ASME Containers Fixed Maximum Liquid Level gauge	Not used during routine transfer operations but may be used in calibrating other non-venting liquid level gauges in the container				3.11.5.1(b)

Note: If the facility does not have a particular feature described in the table, write "NA" in both the "Yes" and "No" columns corresponding its row in item 2.

Form 9.6
Special Protection Measures –Passive Systems

A	B	C	D		E
Item #	Special Protection Option	Question	Proposed for the facility?		NFPA 58 Section Reference
			Yes	No	
1	Insulation around the container	Insulation provided on each of the containers?			3.10.3.1
		Insulation material complies with the requirements of section 3.10.3.1 of NFPA 58?			3.10.3.1
2	Mounding of containers	Each container in the facility is mounded?			3.10.3.2
		Mounding complies with each requirement under section 3.2.9.3 of NFPA 58.			3.10.3.2
3	Burying of containers	Each container in the facility is buried?			3.10.3.3
		Buried containers comply with each requirement under section 3.2.9.1 of NFPA 58.			3.10.3.3 and 3.2.9.1

Form 9.7
Special Protection Measures –Active Systems

Item #	Special Protection Option	Question	Is the Facility compliant?		NFPA 58 Section Reference
			Yes	No	
1	Water spray systems	Are fixed water spray systems, complying with NFPA 15 requirements, used for each container in the facility?			3.10.3.4
		Do fire responsive devices actuate water spray system automatically?			3.10.3.4
		Can the water spray systems be actuated manually also?			3.10.3.4
2	Monitor nozzle systems	Are the monitor nozzles located and arranged so that the water stream can wet the surfaces of all containers exposed to a fire?			3.10.3.5
		Can the water stream from a monitor nozzle reach and wet the entire surface of, at least, one half of a length from one end of each of the containers it is designed to protect?			3.10.3.5
		Do fixed monitor nozzles comply with NFPA 15 requirements?			3.10.3.5
		Do fire responsive devices actuate the monitor nozzles?			3.10.3.5
		Can the monitor nozzles can be actuated manually also?			3.10.3.5

Equivalent Protection to a Water Supply for Industrial and Bulk Facilities

In the case where water supply is not available in or near the LP-Gas facility, or is inadequate or is prohibitively expensive to connect to a public or private water supply hydrant, alternative methods for providing protection should be considered. In lieu of providing a water supply, several alternatives are indicated in Table 9.1, which can offer an equivalency to a water supply system.

The intent of the controls identified in Table 9.1 is to maintain the entire system as a gas tight entity. These methods include reducing the service life of equipment, increasing the design pressure rating of the system beyond the requirements of NFPA 58, or providing early detection and isolation of the system to ensure product control. This list is not exhaustive and is not ranked in an order of priority.

Table 9.1

Equivalent Protection to a Water Supply for Bulk and Industrial Facilities

Item #	Possible options to implement when adequate water supply is not available
1	Reduce the service life of hoses.
2	Increase frequency of equipment inspection.
3	Establish a service life program for the maintenance of the container's pressure relief devices. This could include the installation of a listed multiple port valve and certifying that the relief devices are properly set and maintained every 5 to 10 years.
4	Increase the design strength of the piping and fitting systems.
5	Install emergency shutoff valves in conjunction with container internal valves.
6	Install emergency shutoff valves downstream of transfer pump outlets, and upstream of the vapor and liquid valves at the bulkhead.
7	Install pneumatic tubing along the facility boundary to serve as a perimeter fire detection system. This would provide protection of the facility against exposure fires.
8	Provide optical flame detection or linear heat detection, or a gas detection system connected to an isolation valve installed downstream of every liquid and vapor nozzle on the container. This system could also be monitored to send a signal to an alarm company that notifies the Fire Department of an event.
9	Increase the separation distances of internal facility exposures to the container. These exposures would include a site dumpster, idle or waste pallets and combustibles, and increasing the parking distances between the bobtails and transports in relation to the container.
10	Relocate overhead power lines away from all container and cylinder storage areas to protect against ignition in the event of a line dropping due to wind or power pole impact.
11	Eliminate all combustible vegetation within 30 feet of the LP-Gas container. This can be accomplished using gravel, or paving the site yard.
12	Install tanks using the mounding or burial method.

CHAPTER 10

Fire Safety Analysis Examples

In this chapter, the use of the Fire Safety Analysis described in the previous chapters is illustrated with specific examples. Four different LP-Gas facility scenarios are considered. The assumptions made on the design, location and other features of the facility are indicated and the FSA procedure is illustrated using the fill-in forms discussed in earlier chapters. The four different facilities have been chosen to be a representative (though not all-inclusive) sample of the LP-Gas facility characteristics found in the US.

In the examples below, the form numbers indicated are the same as in the main body of the manual. Also, each example is illustrated schematically with a location, service and neighborhood characteristics map of the facility.

10.1 Illustrative Example # 1

LP-Gas Facility:
Four 1,800 gal containers are located within an industrial area and within the property boundary of a small rural manufacturing plant. The customer plant is supplied with vapor from the containers. There is no separate vaporizer but the container pressure is used for the vapor service.

Other Facility Information:

1) The containers are located at about 130 ft to the east of the manufacturing plant, next to a parking area. The parking area extends 150 ft north and 25 ft to the east of the container area.
2) A main road exists to the south of the container area at a distance of 70 ft.
3) The vapor line into the building is an underground line and is cathodically protected.
4) The container area is surrounded by commercial grade galvanized highway guardrail with 3 ft clearance all around within the container area.
5) Liquid filling is through a manifolded, 2 inch line. There is no liquid withdrawal except for the emergency withdrawal connection at the top of each container.
6) Only vapor is withdrawn at the top of the containers. The vapor service line is manifolded.
7) The containers do not have any special protection. Also, no redundant & fail-safe system is provided for the containers.
8) There is no property within 250 ft hazard distance from the containers.
9) There are no public water supply hydrants near the facility. Also, there is no other water source nearby to the manufacturing facility property line; however, water is available from a pond at 5 miles from the facility.
10) The nearest fire department is at a distance of 3 miles and is staffed with volunteer firefighters. Generally, no one is present at the fire station at all times; but any fire alarm is communicated to all volunteers through a horn. The next nearest fire department is 15 miles away and also is manned with volunteer fire fighters.

Figure 10.1 shows a schematic plan view of the LP-Gas facility used in Example1.

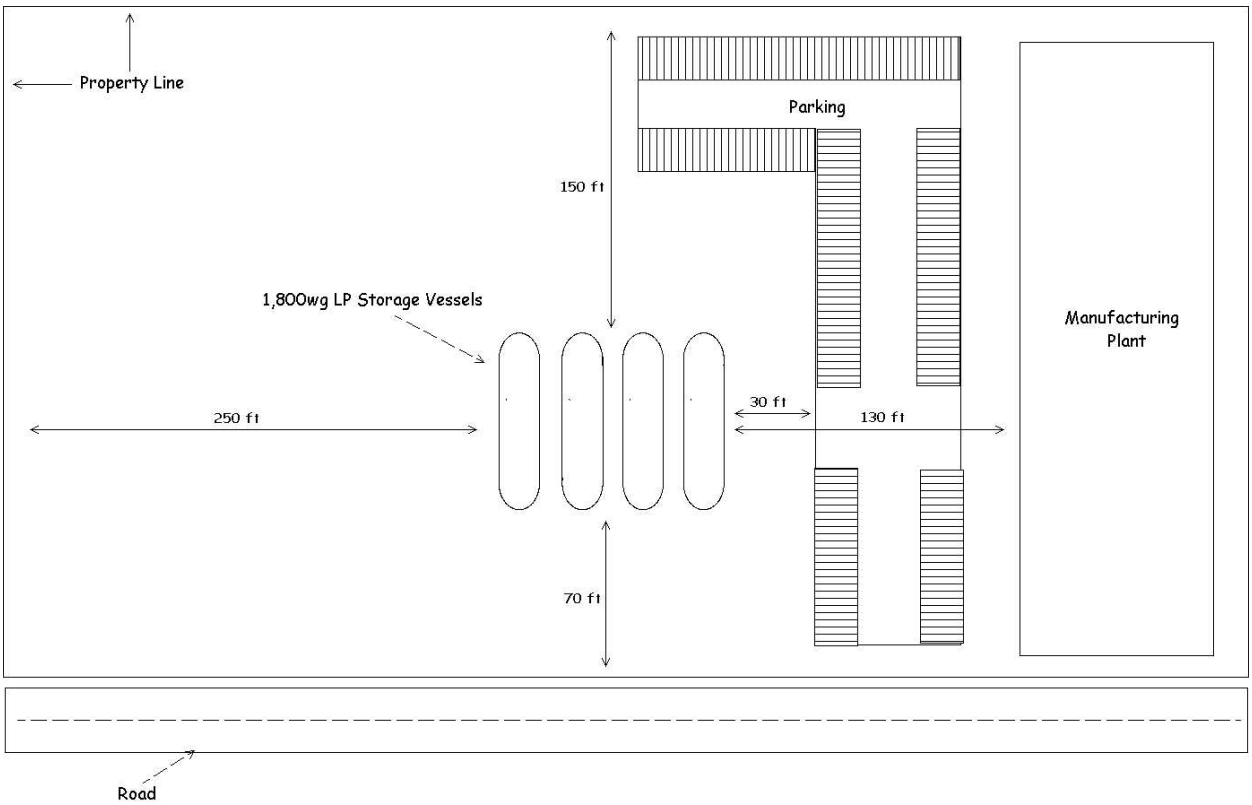

Form 4.1
Initial Data on the LP-Gas Facility

A	B	C
Item #	**Information Item**	**Data**
1	Name of the LP-Gas Plant Owner or Operator	ABC Propane Co., Inc.
2	Contact Name:	
3	Contact Telephone & Fax Numbers	
4	Contact Email Address	
5	Mailing Address	Street 1:
		Street 2:
		City, State, Zip:

Form 4.2
Facility Storage Capacity

A	B	C	D
#	**Individual Container Water Capacity (wc) (gallons)**	**Number of containers**	**Total Water Capacity (wc) of each container size (gallons)**
1	500		
	1,000		
	2,000		
	4,000		
	10,000		
	18,000		
	30,000		
	60,000		
	Other: 1,800	4	7,200
	Other:		
	Other:		
	Other:		
2	**Aggregate Water Capacity**	**4**	**7,200**

Notes:
(1) Column D = Column B x Column C
(2) Do not consider for aggregate capacity calculation above the storage in parked bobtails, transports, and tank cars.
(3) Do not consider containers that are not connected for use.
(4) For the purpose of this analysis, a group of single ASME storage tanks without manifold piping allowing aggregate storage of more than 4,000 GWC or more is **not** considered to trigger the need for an FSA if the containers of 2000 gallons or less are separated by 25 feet or more, and containers of greater than 2000 gallons are separated by 50 ft or more, or by other means acceptable to the authority having jurisdiction.

Form 4.3
Additional Information on the LP-Gas Facility

☑ Existing Facility; Built to NFPA 58 Edition __**1992**___ ☐ Proposed Facility

a) Name of the Plant (if applicable) _____**ABC Propane Co., Inc.**_____

b) Type of LP-Gas Plant: ☐ Commercial ☑ Industrial ☐ Bulk Plant

c) Facility is located in ☑ Rural Area, ☐ Suburban Area, ☐ City Commercial Zone
☐ City Industrial Zone

d) Facility neighbors[§]: ☐ Agri fields ☐ Commercial Bldgs ☐ Flammable Liquids Storage
(Check all that apply) ☑ Industrial Activity (metal fabrication, cutting and welding, etc)
☐ Manufacturing ☐ Others (explain) _____

e) Geographic Location of Plant:
Address: _____
_____

f) Landmarks, if any: _____
_____

g) LP-Gas liquid supply by: ☑ Bobtail ☐ Truck Transport ☐ Rail Tank Car
(Check all that apply) ☐ Pipeline

h) LP-Gas Distribution by: ☐ Bobtail ☐ Truck Transport ☑ Vapor Piping
Plant (Check all that apply) ☐ Liquid Piping ☐ Dispensing or Vehicle fueling

i) Number of vehicle entrances: ☑ One ☐ Two ☐ More than two

j) Type of access roads to the plant: ☑ Rural ☐ City or Town ☐ Highway
(One check per line) Entrance 1 ☐ Dirt road ☑ Gravel road ☐ Paved
(One check per line) Entrance 2 ☐ Dirt road ☐ Gravel road ☐ Paved

k) Staff presence ☐ Not staffed ☑ Only during transfer operations
☐ Staffed always (24/7) ☐ Only during business hours
☐ Other (Explain) _____

l) Location and distances to Institutional Occupancies surrounding the facility, if any, within 250 ft from the facility boundary in the direction of the assets.
___Institutional or other occupancies do not lie within 250 ft., of the facility._____
_____

m) Is an overview plot plan of the facility attached? ☑ Yes ☐ No

§ All properties either abutting the LP-Gas facility or within 250 feet of the container or transfer point nearest to facility boundary.

Form 5.1

Compliance with Code Requirements for Appurtenances on Containers of 2,000 Gallons Water Capacity or Less

A	B	C	D	E
Container #	**Service Configuration # in Figure 5.1**	**Number of Product Release Control Appurtenances**		**NFPA 58 Section Reference (2001 Edition)**
		Required by NFPA 58 (applicable edition)	**Installed on the Container**	
1	**5.1A**	**5**	**5**	2.3.3.2(a) and Table 2.3.3.2(a)
2	**5.1A**	**5**	**5**	
3	**5.1A**	**5**	**5**	
4	**5.1A**	**5**	**5**	
5				
6				

Form 5.5
Requirements for Transfer Lines of 1½-inch Diameter or Larger, Liquid-into-Containers

A	B	C	D	E	F
#	Appurtenance	Appurtenance Provided with the Feature	Installed in the facility?		NFPA 58 Section Reference (2001 edition)
			Yes	No	
1	Emergency Shutoff Valve (ESV)	Installed within 20 ft. of lineal pipe from the nearest end of the hose or swivel-type connections.	√		3.2.19.2
		Automatic shutoff thorough thermal (fire) actuation with melting point of thermal element < 250 °F	√		3.2.19.4
		Temperature sensitive element installed within 5 ft from the nearest end of the hose or swivel type piping connected to liquid transfer line,	√		3.2.19.4
		Manual shutoff feature provided at ESV installed location.	√		3.2.19.8
		Manual shutoff device provided at a remote location, not less than 25 ft., and not more than 100 ft. from the ESV.	√		3.2.19.8
		An ESV is installed on each leg of a multi leg piping each of which is connected to a hose or a swivel type connection on one side and to a header of size larger than 1½ inch in diameter on the other side.	√		3.2.19.3 4.2.3.6(a)
		Breakaway stanchion is provided such that in any pull-away break will occur on the hose or swivel-type connection side while retaining intact the valves and piping on the plant side.	√		3.2.19.6
		Annually tested and documented?	√		3.2.19.7
2	Back flow Check Valve (BCKV)**	Installed downstream of the hose or swivel-type connection	√		3.2.19.6
		BCKV is designed for this specific application.	√		3.2.19.2 *Exception*
		A BCKV is installed on each leg of a multi leg piping each of which is connected to a hose or a swivel type connection on one side and to a header of size larger than 1½ inch in diameter on the other side.	√		3.2.19.3
		Breakaway stanchion is provided such that in any pull-away break will occur on the hose or swivel-type connection side while retaining intact the valves and piping on the plant side.	√		3.2.19.6
		Annually tested and documented?	√		3.2.19.7

** The backflow check valve (BCKV) is only permitted when flow is only into the container and shall have a metal-to-metal seat or a primary resilient seat with metal backup, not hinged with a combustible material.

Form 5.7
Requirements for Vapor Transfer Lines 1¼-inch Diameter or Larger

A	B	C	D	E	F
#	Appurtenance	Appurtenance Provided with the Feature	Installed in the facility?		NFPA 58 Section Reference
			Yes	No	
3	Emergency Shutoff Valve (ESV)	Installed within 20 ft. of lineal pipe form the nearest end of the hose or swivel-type connections.	√		3.2.19.2
		Automatic shutoff thorough thermal (fire) actuation with melting point of thermal element < 250 ^{o}F	√		3.2.19.4
		Temperature sensitive element installed within 5 ft from the nearest end of the hose or swivel type piping connected to liquid transfer line,	√		3.2.19.4
		Manual shutoff feature provided at E SV installed location.	√		3.2.19.8
		Manual shutoff device provided at a remote location, not less than 25 ft., and not more than 100 ft. from the ESV.	√		3.2.19.8
		An ESV is installed on each leg of a multi leg piping each of which is connected to a hose or a swivel type connection on one side and to a header of size larger than 1½ inch in diameter on the other side.	√		3.2.19.3 4.2.3.6(a)
		Breakaway stanchion is provided such that in any pull-away break will occur on the hose or swivel-type connection side while retaining intact the valves and piping on the plant side.	√		3.2.19.6

Form 6.1
Evaluation of Physical Protection and Other Measures

A	B	C	D	E	F
#	Item	Features	Installed in the facility?		NFPA 58 Section Reference (2001 edition)
			Yes	No	
1	Lighting‡	For nighttime operations adequate lighting provided to illuminate storage containers, container being loaded, control valves, and other equipment	√		3.3.7
2	Vehicle impact protection	Protection against vehicular (traffic) impacts on containers, transfer piping and other appurtenances is designed and provided commensurate with the size of vehicles and type of traffic in the facility. (Example protection systems include but not limited to (1) Guard rails, (2) Steel bollards, (3) Raised sidewalks.	√		2.3.7.2 3.2.15.7
3	Protection against corrosion	Is the above ground piping in contact with a support or a corrosion causing substance protected against corrosion?		√	3.2.15.7
Complete only 4A or 4B					
4A	Perimeter Fence	Has an industrial type or chain link fence of at least 6 ft high or equivalent protection provided to enclose (all around) container appurtenances, pumping equipment, loading and unloading and container filling facilities?	√		3.3.6.1
		Has at least two means of emergency accesses (gates) from the enclosure provided? **NOTE:** (i) A second gate is not required when, (i) the area enclosed is less than 100 ft^2, or (ii) the point of transfer is within 3 ft of the gate, or containers are not filled within the enclosure		√	3.3.6.1 and associated Exception 1
		Has a clearance of, at least, 3 feet all around to allow emergency access to the required means of egress been provided?	√		3.3.6.1
	Guard Service	If a guard service is provided, is this service extended to LP-Gas plant and are the guard personnel provided with appropriate LP-Gas related training, per section 1.5 of NFPA 58?	NA		3.3.6.1
4B	Lock-in-Place devices	Are Lock-in-Place devices provided to prevent unauthorized use or operation of any container appurtenance, system valves, equipment in lieu of the fence requirements above?	NA		3.3.6.1 or 3.3.6.2

Fill only items 1, 2, 3, and 4A or 4B. Leave blank or indicate by "NA" when not filling the "YES" or "NO" column.

‡ Leave blank if the facility is not operated in the night.

Form 6.2
Ignition Source Control Assessment

A	B	C	D	E
#	Ignition Control Requirement	Is the Facility compliant?		NFPA 58 Section Reference (2001 edition)
		Yes	No	
1	Combustible materials, weeds and tall grass not closer than 10 ft from each container?	√		3.2.2.6
2	Distance is at least 20 ft between containers and tanks containing flammable liquids with flash point < 200 F (ex., gasoline)	√		3.2.3.3
3	Electrical equipment and wiring are installed per Code requirements.	√		3.7.2
4	Open flame equipment are located and used according to Code.	√		3.7.3
5	Ignition control procedures and requirements during liquid transfer operations are complied with.	√		4.2.3.2
6	An approved, portable, dry chemical fire extinguisher of minimum capacity 18 Lbs and having a B:C rating is provided in the plant	√		3.10.2.4
7	An approved, portable, dry chemical fire extinguisher for each vehicle, as required	√		6.2.4
8	Prohibition on smoking within the plant premises strictly enforced	√		4.2.3.2 & 6.3.10

Notes: 1) If there is no flammable liquid storage in or nearby the facility insert "NA" in both "Yes" and "No" columns corresponding to the appropriate row.

2) If there are no electrical equipment or there are no open flame equipment in the facility, then facility insert "NA" in both "Yes" and "No" columns corresponding to the appropriate rows.

Form 6.3

Separation Distances from Containers to Buildings, Property line that can be built upon, and inter-container distances

A	B	C	D	E	F	G
#	Container Size Range in gal (W.C.)	Separation Between A property line, important building or other property and the nearest container which is	Minimum Distance (ft)	Is the Facility compliant? Yes	No	NFPA 58 Section Reference (2001 edition)
1	501 to 2,000	Above Ground	25	√		Table 3.2.2.2
		Underground or Mounded	10	NA	NA	
		Between containers	3	√		
2	2,001 to 30,000	Above Ground	50	NA	NA	
		Underground or Mounded	50	NA	NA	
		Between containers	5	NA	NA	
3	30,001 to 70,000	Above Ground	75	NA	NA	
		Underground or Mounded	50	NA	NA	
		Between containers	¼ sum of diameters of adjacent containers	NA	NA	
4	70,001 to 90,000	Above Ground	100	NA	NA	
		Underground or Mounded	50	NA	NA	
		Between containers	¼ sum of diameters of adjacent containers	NA	NA	
5	All sizes greater than 125 gal	Separation distance between a LP-Gas container and an above ground storage tank containing flammable or combustible liquids of flash points below 200 ^{o}F.	20	√		3.2.2.6 (e)

Note: If any of the container sizes indicated in the above form is not present in the facility, write "NA" in both Yes and No columns. Do not count them for compliance with the code.

.

Form 6.4
Separation Distances between Points of Transfer and other Exposures

A	B		C	D	E	F	G
#	Type of Exposure within or outside the facility boundary		Check if exposure is present	Minimum Distance (ft)	Is the Facility compliant?		NFPA 58 Section Reference (2001 edition)
					Yes	No	
1	Buildings, mobile homes, recreational vehicles, and modular homes with fire-resistive walls			10	NA	NA	Table 3.2.3.3
2	Buildings with other than fire resistive walls			25	NA	NA	
3	Building wall openings or pits at or below the level of the point of transfer			25	NA	NA	
4	Line of adjoining property that can be built upon			25	NA	NA	
5	Outdoor places of public assembly, including school yards, athletic fields, and playgrounds			50	NA	NA	
6	Public ways, including public streets, highways, thoroughfares, and sidewalks	From points of transfer in LP-Gas dispensing stations and at vehicle fuel dispensers.	√	10	√		
		From other points of transfer	√	25	√		
7	Driveways			5	NA	NA	
8	Mainline railroad track centerlines			25	NA	NA	
9	Containers other than those being filled			10	NA	NA	
10	Flammable and Class II combustible liquid dispensers and aboveground and underground containers			20	NA	NA	Table 3.2.3.3 & 3.2.2.6(e)
11	Flammable and Class II combustible liquid dispensers and the fill connections of LPG containers			10			Table 3.2.3.3
12	LP-Gas dispensing device located close to a Class I liquid dispensing device.			10	NA	NA	3.9.4.3

NOTE: Place a checkmark in column C against an exposure that is present in or around the facility. Fill columns E or F for only those rows for which there is a checkmark in column C.

Table 7.1
Distances to Various Types of Propane Hazards Under Different Release Models**

Model #	Details of the Propane Release Model Releases from or due to		Vapor Dispersion Distance to LFL (ft)	Explosion Hazard Distance (ft)	Fire Ball Radiation Distance (ft)
1A	Bobtail hose failure. Release of the entire inventory in the hose, quickly.	1" ID x 150 ft hose length	250	110	50
1B		1" ID x 120 ft hose length	230	103	45
1C		1" ID x 75 ft hose length	190	90	40
2	Release of the inventory in a transfer piping 1" x 30 ft + @ 20 gpm for 10 min., due to failed excess flow valve.		135	120	25
3	Release from the container pressure relief valve		No ignitable vapor concentration at ground level		
4	Release from a 1" ID x 150 ft length transfer piping to a vaporizer and reduced flow from a partially open excess flow valve @ 20 gpm for 10 min.		250	120	50
5	Leak from a corrosion hole in a transfer pipe at a back pressure of 130 psig (corresponding to 80 ^{o}F) for 60 min. Hole size is ¼" ID.		110	120	5
6	Release of the entire inventory in a 2" ID x 20 ft., transfer hose.		195	90	40
7	Transport hose blowdown: Hose size 2" ID, 20 ft length release for 3min., from a Transport after the tank is filled.		75	30	<5

** Results from models described in Appendix B. The results are rounded to the nearest 5 feet.

Form 7.1
Types of Occupancies(1) Near or Surrounding the LP-Gas Facility

Type of Occupancies	Model from Table 7.1 (2)	Is an Occupancy located within the hazard distance from the Facility?	
		Yes	No
Assembly Occupancies (Places of worship, Libraries, Theaters and Auditoriums, Food or Drink Bars, Sports Stadiums, Amusement Parks, Transportation Centers, etc.).	250		√
Institutional Occupancies (Elderly Persons Home or Nursing Home, Hospitals, Alcohol & Drug Rehabilitation Centers, Prisons)	250		√
Educational Occupancies (Elementary Schools, Day Care facilities, etc.)	250		√

NOTES: (1) See Glossary for the definitions of occupancies (Ref: NFPA 5000)

Form 7.2
Exposure to LP-Gas Facility from External Hazards

A	B	C	D
Item #	**Type of Neighboring Operation**	**Hazard DOES exist to LP-Gas Plant**	
		YES	**NO**
1	Petroleum and other hazardous material storage, wholesale dispensing, etc.		√
2	Metal cutting, welding , and metal fabrication		√
3	Industrial Manufacturing that can pose external hazards		√
4	Ports, rail yards and trans-shipment terminals handling flammable and explosive materials.		√
5	Other operations that may pose hazards (Gasoline and other hazardous material dispensing stations, fertilizer storage, etc).		√

NOTE: If a particular activity indicated in column B does not exist, fill both "YES" and "NO" columns with "N/A".

Form 8.1

Data on the Responding Fire Department

A	B		C
Item #	**Data Item**		**Data Entry**
1	Name of the Fire Department (FD).		
2A	Name of the person in the FD assisting with the data acquisition.		
2B	Position of the person in the FD assisting with the data acquisition.		
3A	Date on which FD data was collected.		
3B	Name of the person collecting the data.		
4	Number of firefighters on duty at any time.		
5	Average number of firefighters available for response.		
6A	Number of firefighters qualified to	"Firefighter I" level.	
6B		"Firefighter II" level.	
7A	Number of firefighters who would	respond on the first alarm to the facility.	
7B		respond on the first alarm and who are qualified to the operations level requirements of NFPA 472 or local requirements	
7C		respond on the first alarm with specific knowledge and training on the properties of LP-Gas and LP-Gas fires.	
8A	Number of fire apparatus that have the capability to deploy a 125 gpm hose line supplied by onboard water for at least 4 minutes, and	that are in service in the department.	
8B		that would respond on a first alarm.	

Form 8.2

Response Time data for the Fire Departments

A	B	C	D	E
	Time in Minutes for			
Company or Department	Alarm Receipt & Handling	Turnout	Travel	Total Time

Note: Number in Column E = Sum of numbers from Columns B through D.

Form 8.3

Water Flow Rate and Total Water Volume Required to Cool Containers Exposed to a Fire

A	B	C	D	E	F	G	H
Item #	**ASME Container Size (gallons)**	**Total Surface Area of each Container[i] (ft^2)**	**Surface Area of each container to be Cooled (ft^2)**	**Water flow rate required per container (gpm)**	**Number of containers of the size indicated**	**Total Water flow rate required[~] (gpm)**	**Total volume of water required for 10 min (gal)**
1	500	86	43	10.8			
	1,000	172	86	21.5			
	2,000	290	145	36.3	4	109	
	4,000	374	187	46.8			
	6,500	570	285	71.3			
	9,200	790	395	98.8			
	12,000	990	495	123.8			
	18,000	1,160	580	145.0			
	30,000	1,610	805	201.3			
	45,000	2,366	1,183	295.8			
	60,000	3,090	1,545	386.3			
	90,000	4,600	2,300	575.0			
	Other Size						
2a	Calculated water flow rate for container protection					109	
2b	Water flow rate rounded up to nearest multiple of 125					125	
3	Water for firefighter protection, if required						
4	Total water rate and volume					125	1250

Note: Column D = (1/2) x Column C Column E = 0.25 (gpm/ft^2) x Column D ;
Column G = Column F x Column E Column H = 10 x Column G
Line 2, Column G and Column H are the sum of numbers in each row above line 2 of each column.
Line 4, Column G and Column H are the sum of numbers in rows 2 and 3.
~ Consider only 3 containers for water supply evaluations even if the number of containers in a group is more than 3.

[i] ASME container dimensions obtained from www.standby.com/products/storage_tanks.html

Form 8.4

Evaluation of Water Availability in or Near the LP-Gas Facility

A	B	C	D		
Item #	**Water from**	**Available?**	**Quantitative information**		
1	Public supply or from another piped-in supply through one or more fire hydrants in or near the facility	☐ Yes ☐ No	Hydrant data	Distance from Facility gate (feet)	Available water flow rate from all hydrants[1] (gpm)
			Hydrant 1		
			Hydrant 2		
			Hydrant 3		
2	A nearby static water source (stream, pond, lake, etc).	☐ Yes ☐ No	Distance to water source = _____ Feet Time to set up relay = _____ min. Rate of delivery = _____ gpm		
3	Only through mobile water tanker shuttle.	☐ Yes ☐ No	Time to set up shuttle = _____ min. Sustainable flow rate = _____ gpm		

NOTE: (1) Obtain the flow rate in each hydrant from the local municipal water authority or the entity that supplies water to the hydrant or conduct a test to determine total available flow rate.

10.2 Illustrative Example # 2

LP-Gas Facility:

An 18,000 gal container located in a customer facility. The facility has a transport unloading station. The customer (a shipping container warehouse) is supplied with vapor from a vaporizer.

Other Facility Information:

1) The container is located on the NE corner of a site and within the customer facility property line.
2) The LP container is 75 ft from the container shipping facility wall and also 75 ft from the vaporizers located to the E of the container.
3) The customer property line nearest to the LP-Gas container is 75 ft away, along the NE direction.
4) The containers are filled from truck transport. The transport unloading station is 110 ft SW of the container. The liquid line is 2" for the transport unloading riser and 1¼ in diameter for the motor fuel-filling riser. This LP-Gas unloading station is 60 ft from the western wall of the shipping container facility.
5) There is a single entrance gate to the customer property on the W side of the property to the main warehouse.
6) The warehouse is in an industrial area.
7) Liquid withdrawal line is manifolded to feed both a motor fuel dispenser and a vaporizer
8) The container does not have any special protection. Also, no redundant & fail-safe system is provided in the LP-Gas plant.
9) There is no sensitive property or populations within the hazard distance (250 ft) from the containers.
10) A single water hydrant is located within the warehouse property line. This hydrant is supplied from the town/municipal water supply system. Water is available from a pond at 5 miles from the facility.
11) The nearest fire department is at a distance of 3 miles and is manned with career firefighters at all times. The next nearest fire department is 7.5 miles away and also is manned with career fire fighters.

Figure 10.2 shows a schematic plan view of the LP-Gas facility used in Example 2.

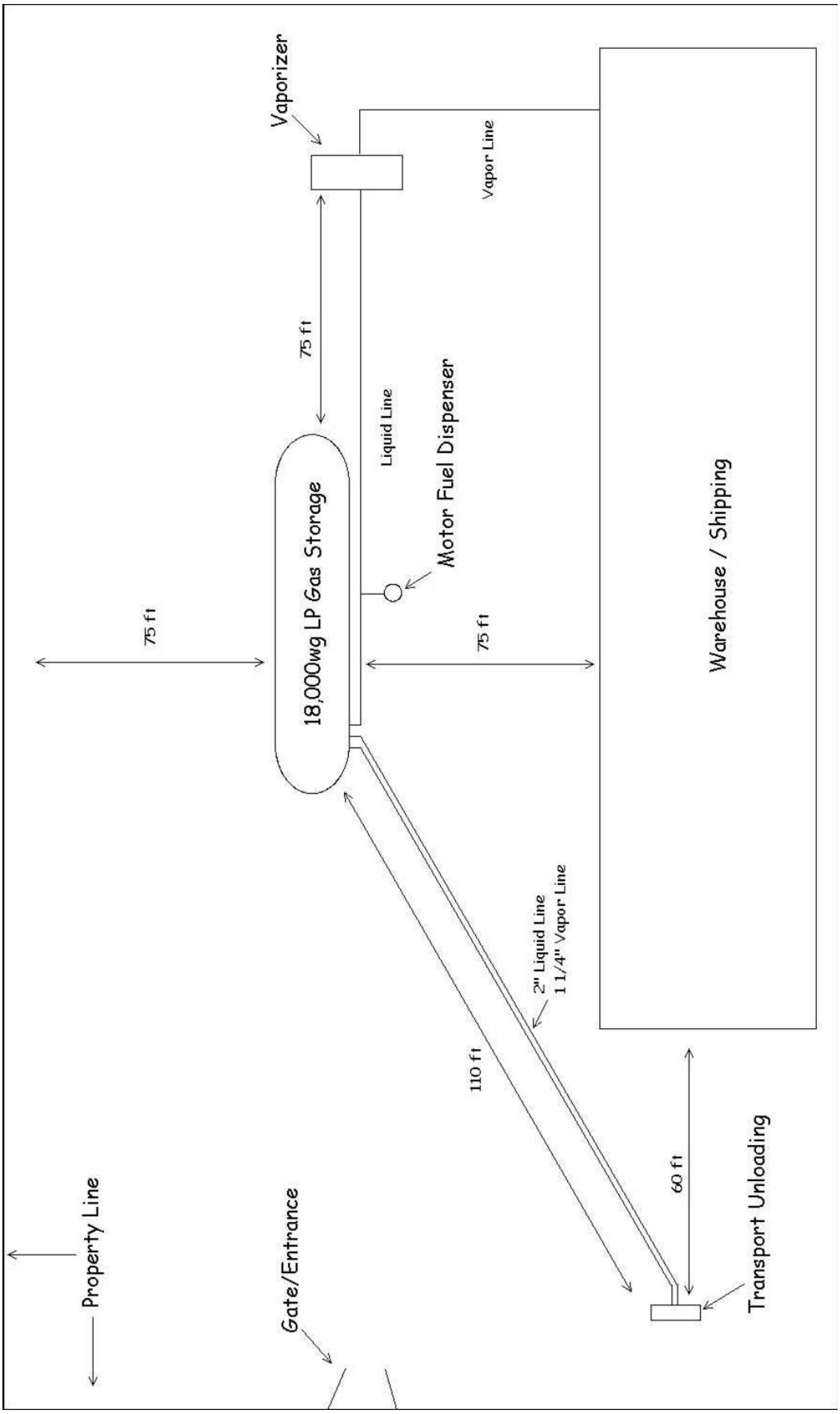
Vaporizer
75 ft
Vapor Line
Liquid Line
Motor Fuel Dispenser
18,000wg LP Gas Storage
75 ft
75 ft
Warehouse / Shipping
2" Liquid Line
1 1/4" Vapor Line
110 ft
60 ft
Transport Unloading
Property Line
Gate/Entrance

Form 4.1
Initial Data on the LP-Gas Facility

A	B	C
Item #	**Information Item**	**Data**
1	Name of the LP-Gas Plant Owner or Operator	XYZ Propane
2	Contact Name:	
3	Contact Telephone & Fax Numbers	
4	Contact Email Address	
5	Mailing Address	Street 1:
		Street 2:
		City, State, Zip: Lynchburg, VA

Form 4.2
Facility Storage Capacity

A	B	C	D
#	**Individual Container Water Capacity (wc) (gallons)**	**Number of containers**	**Total Water Capacity (wc) of each container size (gallons)**
1	500		
	1,000		
	2,000		
	4,000		
	10,000		
	18,000	1	18000
	30,000		
	60,000		
	Other:		
	Other:		
	Other:		
	Other:		
2	**Aggregate Water Capacity**	1	18000

Notes:
(1) Column D = Column B x Column C
(2) Do not consider for aggregate capacity calculation above the storage in parked bobtails, transports, and tank cars.
(3) Do not consider containers that are not connected for use.
(4) For the purpose of this analysis, a group of single ASME storage tanks without manifold piping allowing aggregate storage of more than 4,000 GWC or more is **not** considered to trigger the need for an FSA if the containers of 2000 gallons or less are separated by 25 feet or more, and containers of greater than 2000 gallons are separated by 50 ft or more, or by other means acceptable to the authority having jurisdiction.

Form 4.3
Additional Information on the LP-Gas Facility

☑ Existing Facility; Built to NFPA 58 Edition __**1995**___ ☐ Proposed Facility

a) Name of the Plant (if applicable) _____XYZ Propane _____

b) Type of LP-Gas Plant: ☐ Commercial ☑ Industrial ☐ Bulk Plant

c) Facility is located in ☐ Rural Area, ☑ Suburban Area, ☐ City Commercial Zone
☐ City Industrial Zone

d) Facility neighbors[§]: ☐ Agri fields ☐ Commercial Bldgs ☐ Flammable Liquids Storage
(Check all that apply) ☑ Industrial Activity (metal fabrication, cutting and welding, etc)
☐ Manufacturing ☐ Others (explain) _____

e) Geographic Location of Plant:
Address: _____
_____

f) Landmarks, if any: _____
_____

g) LP-Gas liquid supply by: ☐ Bobtail ☑ Truck Transport ☐ Rail Tank Car
(Check all that apply) ☐ Pipeline

h) LP-Gas Distribution by: ☐ Bobtail ☐ Truck Transport ☑ Vapor Piping
Plant (Check all that apply) ☐ Liquid Piping ☑ Dispensing or Vehicle fueling

i) Number of vehicle entrances: ☑ One ☐ Two ☐ More than two

j) Type of access roads to the plant: ☐ Rural ☑ City or Town ☐ Highway
(One check per line) Entrance 1 ☐ Dirt road ☐ Gravel road ☑ Paved
(One check per line) Entrance 2 ☐ Dirt road ☐ Gravel road ☐ Paved

k) Staff presence ☐ Not staffed ☑ Only during transfer operations
☐ Staffed always (24/7) ☐ Only during business hours
☐ Other (Explain) _____

l) Location and distances to Institutional Occupancies surrounding the facility, if any, within 250 ft from the facility boundary in the direction of the assets.
___Institutional or other occupancies do not lie within 250 ft., of the facility._____
_____

m) Is an overview plot plan of the facility attached? ☑ Yes ☐ No

§ All properties either abutting the LP-Gas facility or within 250 feet of the container or transfer point nearest to facility boundary.

Form 5.4

Compliance with Code Requirements for Appurtenances on Containers Having A Water Capacity Greater than 4,000 gallons Used in Bulk and Industrial Facilities

A	B	C	D	E	F	G
Container #	LP-Gas inlet to and outlet from the container**		Figure #	Total Number of Product Release Control Appurtenances		NFPA 58 Section Reference (2001 edition)
				Required by NFPA 58 (applicable edition)	Installed on the container	
1	Vapor	Inlet	5.2			3.3.3.6 (a)
		Outlet	5.3-2	3	3	3.3.3.6 (c)
	Liquid	Inlet	5.6-2	4	3	3.3.3.6 (b)(2)
		Outlet	5.7-2	4	4	3.3.3.6 (d)(2)

** If the container does not provide an opening for the specific function listed, enter 0 (zero) in columns E and F corresponding to that row.

Form 5.6

Requirements for Manifolded Transfer Lines o Larger than 1½-inch diameter, Liquid withdrawal from containers

A	B	C	D	E	F
#	Appurtenance	Appurtenance Provided with the Feature	Installed in the facility?		NFPA 58 Section Reference
			Yes	No	
3	Emergency Shutoff Valve (ESV)	Installed within 20 ft. of lineal pipe form the nearest end of the hose or swivel-type connections.	√		3.2.19.2
		Automatic shutoff thorough thermal (fire) actuation with melting point of thermal element < 250 °F	√		3.2.19.4
		Temperature sensitive element installed within 5 ft from the nearest end of the hose or swivel type piping connected to liquid transfer line,	√		3.2.19.4
		Manual shutoff feature provided at E SV installed location.	√		3.2.19.8
		Manual shutoff device provided at a remote location, not less than 25 ft., and not more than 100 ft. from the ESV.	√		3.2.19.8
		An ESV is installed on each leg of a multi leg piping each of which is connected to a hose or a swivel type connection on one side and to a header of size 1 ½ inch or larger in diameter on the other side.	√		3.2.19.3 4.2.3.6(a)
		Breakaway stanchion is provided such that in any pull-away break will occur on the hose or swivel-type connection side while retaining intact the valves and piping on the plant side.	√		3.2.19.6

Form 6.1
Evaluation of Physical Protection and Other Measures

A	B	C	D	E	F
#	Item	Features	Installed in the facility?		NFPA 58 Section Reference
			Yes	No	
1	Lighting‡	For nighttime operations adequate lighting provided to illuminate storage containers, container being loaded, control valves, and other equipment	√		3.3.7
2	Vehicle impact protection	Protection against vehicular (traffic) impacts on containers, transfer piping and other appurtenances is designed and provided commensurate with the size of vehicles and type of traffic in the facility. (Example protection systems include but not limited to (1) Guard rails, (2) Steel bollards, (3) Raised sidewalks.	√		2.3.7.2 3.2.15.7
3	Protection against corrosion	Is the above ground piping in contact with a support or a corrosion causing substance protected against corrosion?		√	3.2.15.7
Complete only 4A or 4B					
4A	Perimeter Fence	Has an industrial type or chain link fence of at least 6 ft high or equivalent protection provided to enclose (all around) container appurtenances, pumping equipment, loading and unloading and container filling facilities?	√		3.3.6.1
		Has at least two means of emergency accesses (gates) from the enclosure provided? **NOTE:** (i) A second gate is not required when, (iii) the area enclosed is less than 100 ft^2, or (iv) the point of transfer is within 3 ft of the gate, or containers are not filled within the enclosure		√	3.3.6.1 and associated Exception 1
		Has a clearance of, at least, 3 feet all around to allow emergency access to the required means of egress been provided?	√		3.3.6.1
	Guard Service	If a guard service is provided, is this service extended to LP-Gas plant and are the guard personnel provided with appropriate LP-Gas related training, per section 1.5 of NFPA 58?	NA		3.3.6.1
4B	Lock-in-Place devices	Are Lock-in-Place devices provided to prevent unauthorized use or operation of any container appurtenance, system valves, equipment in lieu of the fence requirements above?	NA		3.3.6.1 or 3.3.6.2

Fill only items 1, 2, 3, and 4A or 4B. Leave blank or indicate by "NA" when not filling the "YES" or "NO" column.

‡ Leave blank if the facility is not operated in the night.

Form 6.2
Ignition Source Control Assessment

A	B	C	D	E
#	Ignition Control Requirement	Is the Facility compliant?		NFPA 58 Section Reference (2001 edition)
		Yes	No	
1	Combustible materials, weeds and tall grass not closer than 10 ft from each container?	√		3.2.2.6
2	Distance is at least 20 ft between containers and tanks containing flammable liquids with flash point < 200 F (ex., gasoline)	√		3.2.3.3
3	Electrical equipment and wiring are installed per Code requirements.	√		3.7.2
4	Open flame equipment are located and used according to Code.	√		3.7.3
5	Ignition control procedures and requirements during liquid transfer operations are complied with.	√		4.2.3.2
6	An approved, portable, dry chemical fire extinguisher of minimum capacity 18 Lbs and having a B:C rating is provided in the plant	√		3.10.2.4
7	Is a Fire Extinguisher for each vehicle provided as required?	√		6.2.4
8	Prohibition on smoking within the plant premises strictly enforced	√		4.2.3.2 & 6.3.10

Form 6.3

Separation Distances from Containers to Buildings, Property line that can be built upon, and inter-container distances

A	B	C	D	E	F	G
#	Container Size Range in gal (W.C.)	Separation Between A property line, important building or other property and the nearest container which is	Minimum Distance (ft)	Is the Facility compliant? Yes	No	NFPA 58 Section Reference (2001 edition)
1	501 to 2,000	Above Ground	25	NA	NA	Table 3.2.2.2
		Underground or Mounded	10	NA	NA	
		Between containers	3	NA	NA	
2	2,001 to 30,000	Above Ground	50	√		
		Underground or Mounded	50	NA	NA	
		Between containers	5	NA	NA	
3	30,001 to 70,000	Above Ground	75	NA	NA	
		Underground or Mounded	50	NA	NA	
		Between containers	¼ sum of diameters of adjacent containers	NA	NA	
4	70,001 to 90,000	Above Ground	100	NA	NA	
		Underground or Mounded	50	NA	NA	
		Between containers	¼ sum of diameters of adjacent containers	NA	NA	
5	All sizes greater than 125 gal	Separation distance between a LP-Gas container and an above ground storage tank containing flammable or combustible liquids of flash points below 200 ^{o}F.	20	√		3.2.2.6 (e)

Note: If any of the container sizes indicated in the above form is not present in the facility, write "NA" in both Yes and No columns. Do not count them for compliance with the code.

Form 6.4
Separation Distances between Points of Transfer and other Exposures

A	B		C	D	E	F	G
#	Type of Exposure within or outside the facility boundary		Check if exposure is present	Minimum Distance (ft)	Is the Facility compliant?		NFPA 58 Section Reference
					Yes	No	(2001 edition)
1	Buildings, mobile homes, recreational vehicles, and modular homes with fire-resistive walls			10	NA	NA	Table 3.2.3.3
2	Buildings with other than fire resistive walls			25	NA	NA	
3	Building wall openings or pits at or below the level of the point of transfer			25	NA	NA	
4	Line of adjoining property that can be built upon			25	NA	NA	
5	Outdoor places of public assembly, including school yards, athletic fields, and playgrounds			50	NA	NA	
6	Public ways, including public streets, highways, thoroughfares, and sidewalks	From points of transfer in LP-Gas dispensing stations and at vehicle fuel dispensers.	√	10	√		
		From other points of transfer	√	25	√		
7	Driveways			5	NA	NA	
8	Mainline railroad track centerlines			25	NA	NA	
9	Containers other than those being filled			10	NA	NA	
10	Flammable and Class II combustible liquid dispensers and aboveground and underground containers			20	NA	NA	Table 3.2.3.3 & 3.2.2.6(e)
11	Flammable and Class II combustible liquid dispensers and the fill connections of LPG containers			10			Table 3.2.3.3
12	LP-Gas dispensing device located close to a Class I liquid dispensing device.			10	NA	NA	3.9.4.3

NOTE: Place a checkmark in column C against an exposure that is present in or around the facility. Fill columns E or F for only those rows for which there is a checkmark in column C.

Table 7.1
Distances to Various Types of Propane Hazards Under Different Release Models**

Model #	Details of the Propane Release Model Releases from or due to		Vapor Dispersion Distance to LFL (ft)	Explosion Hazard Distance (ft)	Fire Ball Radiation Distance (ft)
1A	Bobtail hose failure. Release of the entire inventory in the hose, quickly.	1" ID x 150 ft hose length	250	110	50
1B		1" ID x 120 ft hose length	230	103	45
1C		1" ID x 75 ft hose length	190	90	40
2	Release of the inventory in a transfer piping 1" x 30 ft + @ 20 gpm for 10 min., due to failed excess flow valve.		135	120	25
3	Release from the container pressure relief valve		No ignitable vapor concentration at ground level		
4	Release from a 1" ID x 150 ft length transfer piping to a vaporizer and reduced flow from a partially open excess flow valve @ 20 gpm for 10 min.		250	120	50
5	Leak from a corrosion hole in a transfer pipe at a back pressure of 130 psig (corresponding to 80 ^{o}F) for 60 min. Hole size is ¼" ID.		110	120	5
6	Release of the entire inventory in a 2" ID x 20 ft., transfer hose.		195	90	40
7	Transport hose blowdown: Hose size 2" ID, 20 ft length release for 3min., from a Transport after the tank is filled.		75	30	<5

** Results from models described in Appendix B. The results are rounded to the nearest 5 feet.

Form 7.1
Types of Occupancies(1) Near or Surrounding the LP-Gas Facility

Type of Occupancies	Model from Table 7.1 (2)	Is an Occupancy located within the hazard distance from the Facility?	
		Yes	No
Assembly Occupancies (Places of worship, Libraries, Theaters and Auditoriums, Food or Drink Bars, Sports Stadiums, Amusement Parks, Transportation Centers, etc.).	250		√
Institutional Occupancies (Elderly Persons Home or Nursing Home, Hospitals, Alcohol & Drug Rehabilitation Centers, Prisons,	250		√
Educational Occupancies (Elementary Schools, Day Care facilities, etc).	250		√

NOTES: (1) See Glossary for the definitions of occupancies (Ref: NFPA 5000)

Form 7.2
Exposure to LP-Gas Facility from External Hazards

A	B	C	D
Item #	**Type of Neighboring Operation**	**Hazard DOES exist to LP-Gas Plant**	
		YES	**NO**
1	Petroleum and other hazardous material storage, wholesale dispensing, etc.		√
2	Metal cutting, welding , and metal fabrication		√
3	Industrial Manufacturing that can pose external hazards		√
4	Ports, rail yards and trans-shipment terminals handling flammable and explosive materials.		√
5	Other operations that may pose hazards (Gasoline and other hazardous material dispensing stations, fertilizer storage, etc).		√

NOTE: If a particular activity indicated in column B does not exist, fill both "YES" and "NO" columns with "N/A".

Form 8.1

Data on the Responding Fire Department

A	B		C
Item #	**Data Item**		**Data Entry**
1	Name of the Fire Department (FD).		
2A	Name of the person in the FD assisting with the data acquisition.		
2B	Position of the person in the FD assisting with the data acquisition.		
3A	Date on which FD data was collected.		
3B	Name of the person collecting the data.		
4	Number of firefighters on duty at any time.		
5	Average number of firefighters available for response.		
6A	Number of firefighters qualified to	"Firefighter I" level.	
6B		"Firefighter II" level.	
7A	Number of firefighters who would	respond on the first alarm to the facility.	
7B		respond on the first alarm and who are qualified to the operations level requirements of NFPA 472 or local requirements	
7C		respond on the first alarm with specific knowledge and training on the properties of LP-Gas and LP-Gas fires.	
8A	Number of fire apparatus that have the capability to deploy a 125 gpm hose line supplied by onboard water for at least 4 minutes, and	that are in service in the department.	
8B		that would respond on a first alarm.	

Form 8.2

Response Time data for the Fire Departments

A	B	C	D	E
Company or Department	**Time in Minutes for**			
	Alarm Receipt & Handling	**Turnout**	**Travel**	**Total Time**

Note: Number in Column E = Sum of numbers from Columns B through D.

Form 8.3

Water Flow Rate and Total Water Volume Required to Cool Containers Exposed to a Fire

A	B	C	D	E	F	G	H
Item #	**ASME Container Size (gallons)**	**Total Surface Area of each Container[ii] (ft^2)**	**Surface Area of each container to be Cooled (ft^2)**	**Water flow rate required per container (gpm)**	**Number of containers of the size indicated**	**Total Water flow rate required[~] (gpm)**	**Total volume of water required for 10 min (gal)**
1	500	86	43	10.8			
	1,000	172	86	21.5			
	2,000	290	145	36.3			
	4,000	374	187	46.8			
	6,500	570	285	71.3			
	9,200	790	395	98.8			
	12,000	990	495	123.8			
	18,000	1,160	580	145.0	1	145	
	30,000	1,610	805	201.3			
	45,000	2,366	1,183	295.8			
	60,000	3,090	1,545	386.3			
	90,000	4,600	2,300	575.0			
	Other Size						
2a	Calculated water flow rate for container protection					145	
2b	Water flow rate rounded up to nearest multiple of 125					250	
3	Water for firefighter protection, if required						
4	Total water rate and volume					250	2,500

Note: Column D = (1/2) x Column C Column E = 0.25 (gpm/ft^2) x Column D ;
Column G = Column F x Column E Column H = 10 x Column G
Line 2, Column G and Column H are the sum of numbers in each row above line 2 of each column.
~ Line 4, Column G and Column H are the sum of numbers in rows 2 and 3.
Consider only 3 containers for water supply evaluations even if the number of containers in a group is more than 3.

[i] ASME container dimensions obtained from www.standby.com/products/storage_tanks.html

Form 8.4

Evaluation of Water Availability in or Near the LP-Gas Facility

A	B	C	D		
Item #	**Water from**	**Available?**	**Quantitative information**		
1	Public supply or from another piped-in supply through one or more fire hydrants in or near the facility	☐ Yes ☐ No	Hydrant data	Distance from Facility gate (feet)	Available water flow rate from all hydrants[1] (gpm)
			Hydrant 1		
			Hydrant 2		
			Hydrant 3		
2	A nearby static water source (stream, pond, lake, etc).	☐ Yes ☐ No	Distance to water source = _____ Feet Time to set up relay = _____ min. Rate of delivery = _____ gpm		
3	Only through mobile water tanker shuttle.	☐ Yes ☐ No	Time to set up shuttle = _____ min. Sustainable flow rate = _____ gpm		

NOTE: (1) Obtain the flow rate in each hydrant from the local municipal water authority or the entity that supplies water to the hydrant or conduct a test to determine total available flow rate.

10.3 Illustrative Example # 3

LP-Gas Facility:

A single 18,000 gal container located in a small urban bulk plant. The plant has a transport unloading station as well as bobtail loading stations. In addition, the plant also houses a cylinder filling operation within its facility boundary.

Other Facility Information:

1) The bulk plant is located in a high-density population area of the town. A nursing home is located within 250 ft of the facility. There is also a shopping mall entrance within 250 ft of the container.
2) A cylinder filling dock is 50 ft from the container.
3) The container is filled from truck transport. The transport unloading station is 50 ft SW of the container. The liquid line is 2" for the transport unloading riser and 1¼ in diameter for the bobtail filling operation.
4) There is a single entrance gate to the customer property on the W side of the property to the main warehouse.
5) Liquid withdrawal line is manifolded to feed multiple bobtail filling ports.
6) The container does not have any special protection. Also, no redundant & fail-safe system is provided in the LP-Gas plant. The plant is built to conform to NFPA 58, 1992 edition and fulfills all appurtenance requirements.
7) A single water hydrant is located within the bulk plant. This hydrant is supplied from the town/municipal water supply system. Water is also available from a pond at 5 miles from the facility.
8) The nearest fire department is at a distance of 3 miles and is staffed with career firefighters at all times.

Figure 10.3 shows a schematic plan view of the LP-Gas facility used in Example 3.

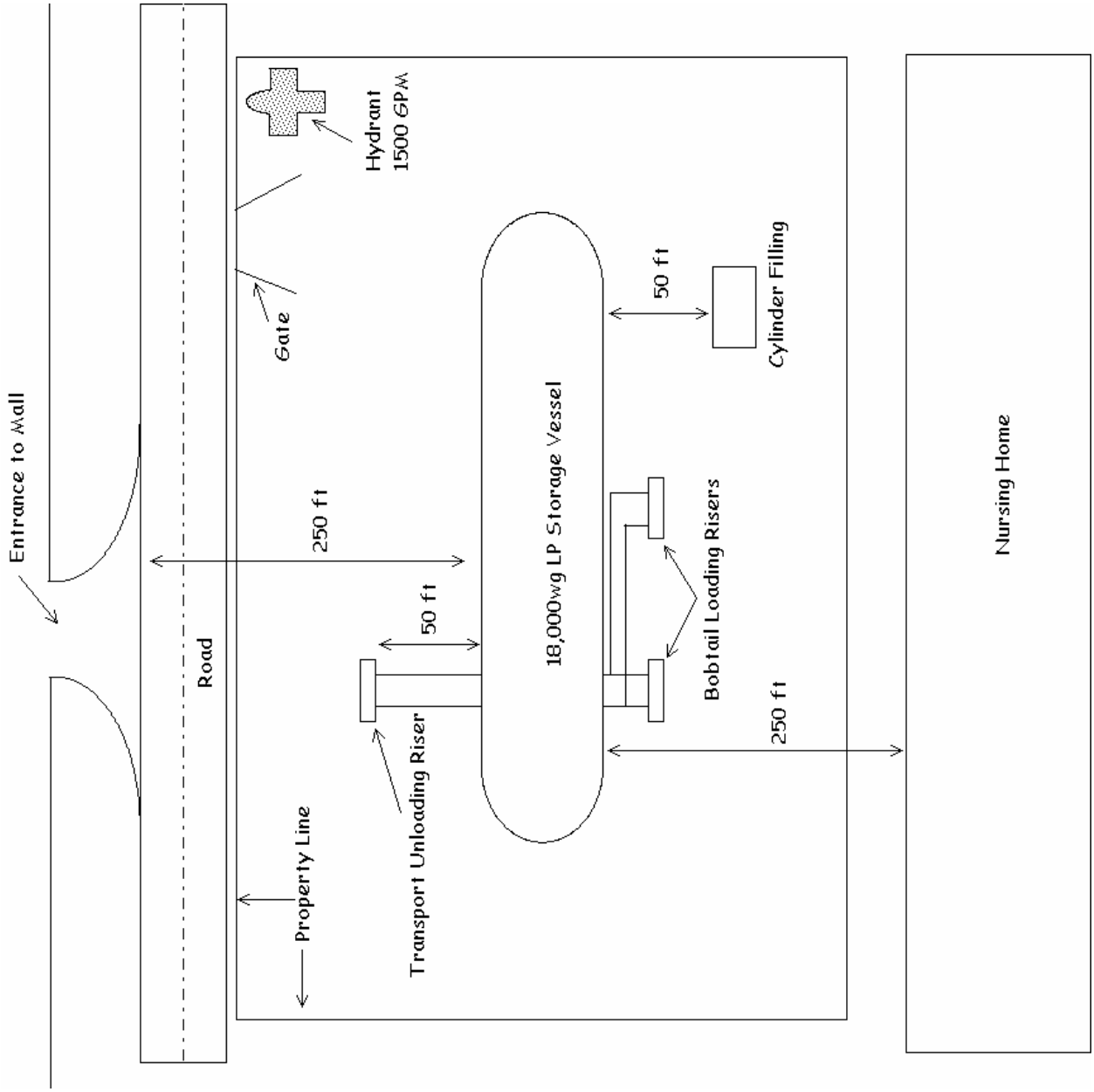

Form 4.1
Initial Data on the LP-Gas Facility

A	B	C
Item #	**Information Item**	**Data**
1	Name of the LP-Gas Plant Owner or Operator	LMN Propane
2	Contact Name:	
3	Contact Telephone & Fax Numbers	
4	Contact Email Address	
5	Mailing Address	Street 1:
		Street 2:
		City, State, Zip: Westfield, NJ

Form 4.2
Facility Storage Capacity

A	B	C	D
#	**Individual Container Water Capacity (wc) (gallons)**	**Number of containers**	**Total Water Capacity (wc) of each container size (gallons)**
1	500		
	1,000		
	2,000		
	4,000		
	10,000		
	18,000	1	18000
	30,000		
	60,000		
	Other:		
	Other:		
	Other:		
	Other:		
2	**Aggregate Water Capacity**	1	18000

Notes:
(1) Column D = Column B x Column C
(2) Do not consider for aggregate capacity calculation above the storage in parked bobtails, transports, and tank cars.
(3) Do not consider containers that are not connected for use.
(4) For the purpose of this analysis, a group of single ASME storage tanks without manifold piping allowing aggregate storage of more than 4,000 GWC or more is **not** considered to trigger the need for an FSA if the containers of 2000 gallons or less are separated by 25 feet or more, and containers of greater than 2000 gallons are separated by 50 ft or more, or by other means acceptable to the authority having jurisdiction.

Form 4.3
Additional Information on the LP-Gas Facility

☑ Existing Facility; Built to NFPA 58 Edition __**1992**___ ☐ Proposed Facility

a) Name of the Plant (if applicable) _____LMN Plant _____

b) Type of LP-Gas Plant: ☐ Commercial ☑ Industrial ☐ Bulk Plant

c) Facility is located in ☐ Rural Area, ☑ Suburban Area, ☐ City Commercial Zone
☐ City Industrial Zone

d) Facility neighbors[§]: ☐ Agri fields ☐ Commercial Bldgs ☐ Flammable Liquids Storage
(Check all that apply) ☑ Industrial Activity (metal fabrication, cutting and welding, etc)
☐ Manufacturing ☐ Others (explain) _____

e) Geographic Location of Plant:
Address: _____
_____

f) Landmarks, if any: _____
_____

g) LP-Gas liquid supply by: ☐ Bobtail ☑ Truck Transport ☐ Rail Tank Car
(Check all that apply) ☐ Pipeline

h) LP-Gas Distribution by: ☑ Bobtail ☐ Truck Transport ☑ Vapor Piping
Plant (Check all that apply) ☐ Liquid Piping ☑ Dispensing or Vehicle fueling

i) Number of vehicle entrances: ☑ One ☐ Two ☐ More than two

j) Type of access roads to the plant: ☐ Rural ☑ City or Town ☐ Highway
(One check per line) Entrance 1 ☐ Dirt road ☐ Gravel road ☑ Paved
(One check per line) Entrance 2 ☐ Dirt road ☐ Gravel road ☐ Paved

k) Staff presence ☐ Not staffed ☑ Only during transfer operations
☐ Staffed always (24/7) ☐ Only during business hours
☐ Other (Explain) _____

l) Location and distances to Institutional Occupancies surrounding the facility, if any, within 250 ft from the facility boundary in the direction of the assets.
___Institutional or other occupancies do exist within 250 ft., of the facility._____
_____

m) Is an overview plot plan of the facility attached? ☑ Yes ☐ No

§ All properties either abutting the LP-Gas facility or within 250 feet of the container or transfer point nearest to facility boundary.

Form 5.4
Compliance with Code Requirements for Appurtenances on Containers Having A Water Capacity Greater than 4,000 gallons Used in Bulk and Industrial Facilities

A	B	C	D	E	F	G
Container #	LP-Gas inlet to and outlet from the container**		Figure #	Total Number of Product Release Control Appurtenances		NFPA 58 Section Reference (2001 edition)
				Required by NFPA 58 (applicable edition)	Installed on the container	
1	Vapor	Inlet	5.2			3.3.3.6 (a)
		Outlet	5.3-2	3	3	3.3.3.6 (c)
	Liquid	Inlet	5.6-2	4	4	3.3.3.6 (b)(2)
		Outlet	5.7-2	4	4	3.3.3.6 (d)(2)

** If the container does not provide an opening for the specific function listed, enter 0 (zero) in columns E and F corresponding to that row.

Form 5.5
Requirements for Manifolded Transfer Lines Larger than 1½-inch diameter, Liquid-into-Containers

A	B	C	D	E	F
#	Appurtenance	Appurtenance Provided with the Feature	Installed in the facility?		NFPA 58 Section Reference (2001 edition)
			Yes	No	
1	Emergency Shutoff Valve (ESV)	Installed within 20 ft. of lineal pipe from the nearest end of the hose or swivel-type connections.	√		3.2.19.2
		Automatic shutoff thorough thermal (fire) actuation with melting point of thermal element less than 250 °F	√		3.2.19.4
		Temperature sensitive element (fusible link) installed within 5 ft from the nearest end of the hose or swivel type piping connected to liquid transfer line,	√		3.2.19.4
		Manual shutoff feature provided at ESV installed location.	√		3.2.19.8
		Manual shutoff device provided at a remote location, not less than 25 ft., and not more than 100 ft. from the ESV.	√		3.2.19.8
		An ESV is installed on each leg of a multi leg piping each of which is connected to a hose or a swivel type connection on one side and to a header of size 1½ inch or larger in diameter on the other side.	√		3.2.19.3 4.2.3.6(a)

Form 5.5 (continued)

A	B	C	D	E	F
#	Appurtenance	Appurtenance Provided with the Feature	Installed in the facility?		NFPA 58 Section Reference
			Yes	No	
	Emergency Shutoff Valve (continued)	Breakaway stanchion is provided such that in any pull-away break will occur on the hose or swivel-type connection side while retaining intact the valves and piping on the plant side.	√		3.2.19.6
2	Back flow Check Valve (BCKV)**	Installed downstream of the hose or swivel-type connection	√		3.2.19.6
		BCKV is designed for this specific application.	√		3.2.19.2 *Exception*
		A BCKV is installed on each leg of a multi leg piping each of which is connected to a hose or a swivel type connection on one side and to a header of size 1½ inch or larger in diameter on the other side.	√		3.2.19.3
		Breakaway stanchion is provided such that in any pull-away break will occur on the hose or swivel-type connection side while retaining intact the valves and piping on the plant side.	√		3.2.19.6

** The backflow check valve (BCK) is only permitted when flow is only into the container and shall have a metal-to-metal seat or a primary resilient seat with metal backup, not hinged with a combustible material.

Form 5.6

Requirements for Manifolded Transfer Lines larger than 1½-inch diameter, Liquid withdrawal from containers

A	B	C	D	E	F
#	Appurtenance	Appurtenance Provided with the Feature	Installed in the facility?		NFPA 58 Section Reference
			Yes	No	
3	Emergency Shutoff Valve (ESV)	Installed within 20 ft. of lineal pipe form the nearest end of the hose or swivel-type connections.	√		3.2.19.2
		Automatic shutoff thorough thermal (fire) actuation with melting point of thermal element < 250 ^{o}F	√		3.2.19.4
		Temperature sensitive element installed within 5 ft from the nearest end of the hose or swivel type piping connected to liquid transfer line,	√		3.2.19.4
		Manual shutoff feature provided at E SV installed location.	√		3.2.19.8
		Manual shutoff device provided at a remote location, not less than 25 ft., and not more than 100 ft. from the ESV.	√		3.2.19.8
		An ESV is installed on each leg of a multi leg piping each of which is connected to a hose or a swivel type connection on one side and to a header of size 1½ inch or larger in diameter on the other side.	√		3.2.19.3 4.2.3.6(a)
		Breakaway stanchion is provided such that in any pull-away break will occur on the hose or swivel-type connection side while retaining intact the valves and piping on the plant side.	√		3.2.19.6
		Number of ESV's in liquid withdrawal service	2		

Note: If more than one ESV is installed in the facility, use one Form 5.6 for each ESV.

Form 6.1
Evaluation of Physical Protection and Other Measures

A	B	C	D	E	F
#	Item	Features	Installed in the facility?		NFPA 58 Section Reference (2001)
			Yes	No	
1	Lighting‡	For nighttime operations adequate lighting provided to illuminate storage containers, container being loaded, control valves, and other equipment	√		3.3.7
2	Vehicle impact protection	Protection against vehicular (traffic) impacts on containers, transfer piping and other appurtenances is designed and provided commensurate with the size of vehicles and type of traffic in the facility. (Example protection systems include but not limited to (1) Guard rails, (2) Steel bollards, (3) Raised sidewalks.	√		2.3.7.2 3.2.15.7
3	Protection against corrosion	Is the above ground piping in contact with a support or a corrosion causing substance protected against corrosion?		√	3.2.15.7
Complete only 4A or 4B					
4A	Perimeter Fence	Has an industrial type or chain link fence of at least 6 ft high or equivalent protection provided to enclose (all around) container appurtenances, pumping equipment, loading and unloading and container filling facilities?	√		3.3.6.1
		Has at least two means of emergency accesses (gates) from the enclosure provided? **NOTE:** (i) A second gate is not required when, (v) the area enclosed is less than 100 ft^2, or (vi) the point of transfer is within 3 ft of the gate, or containers are not filled within the enclosure	√		3.3.6.1 and associated Exception 1
		Has a clearance of, at least, 3 feet all around to allow emergency access to the required means of egress been provided?	√		3.3.6.1
	Guard Service	If a guard service is provided, is this service extended to LP-Gas plant and are the guard personnel provided with appropriate LP-Gas related training, per section 1.5 of NFPA 58?	NA		3.3.6.1
4B	Lock-in-Place devices	Are Lock-in-Place devices provided to prevent unauthorized use or operation of any container appurtenance, system valves, equipment in lieu of the fence requirements above?	NA		3.3.6.1 or 3.3.6.2

Fill only items 1, 2, 3, and 4A or 4B. Leave blank or indicate by "NA" when not filling the "YES" or "NO" column.

‡ Leave blank if the facility is not operated in the night.

Form 6.2
Ignition Source Control Assessment

A	B	C	D	E
#	Ignition Control Requirement	Is the Facility compliant?		NFPA 58 Section Reference (2001)
		Yes	No	
1	Combustible materials, weeds and tall grass not closer than 10 ft from each container?	√		3.2.2.6
2	Distance is at least 20 ft between containers and tanks containing flammable liquids with flash point < 200 F (ex., gasoline)	√		3.2.3.3
3	Electrical equipment and wiring are installed per Code requirements.	√		3.7.2
4	Open flame equipment are located and used according to Code.	√		3.7.3
5	Ignition control procedures and requirements during liquid transfer operations are complied with.	√		4.2.3.2
6	An approved, portable, dry chemical fire extinguisher of minimum capacity 18 Lbs and having a B:C rating is provided in the plant	√		3.10.2.4
7	An approved, portable, dry chemical fire extinguisher is provided for each vehicle, as required	√		6.2.4
8	Prohibition on smoking within the plant premises strictly enforced	√		4.2.3.2 & 6.3.10

Form 6.3

Separation Distances from Containers to Buildings, Property line that can be built upon, and inter-container distances

A	B	C	D	E	F	G
#	Container Size Range in gal (W.C.)	Separation Between A property line, important building or other property and the nearest container which is	Minimum Distance (ft)	Is the Facility compliant? Yes	Is the Facility compliant? No	NFPA 58 Section Reference (2001)
1	501 to 2,000	Above Ground	25	NA	NA	Table 3.2.2.2
		Underground or Mounded	10	NA	NA	
		Between containers	3	NA	NA	
2	2,001 to 30,000	Above Ground	50	√		
		Underground or Mounded	50	NA	NA	
		Between containers	5	NA	NA	
3	30,001 to 70,000	Above Ground	75	NA	NA	
		Underground or Mounded	50	NA	NA	
		Between containers	¼ sum of diameters of adjacent containers	NA	NA	
4	70,001 to 90,000	Above Ground	100	NA	NA	
		Underground or Mounded	50	NA	NA	
		Between containers	¼ sum of diameters of adjacent containers	NA	NA	
5	All sizes greater than 125 gal	Separation distance between a LP-Gas container and an above ground storage tank containing flammable or combustible liquids of flash points below 200 ^{o}F.	20	√		3.2.2.6 (e)

Note: If any of the container sizes indicated in the above form is not present in the facility, write "NA" in both Yes and No columns. Do not count them for compliance with the code.

Form 6.4
Separation Distances between Points of Transfer and other Exposures

A	B		C	D	E	F	G
#	Type of Exposure within or outside the facility boundary		Check if exposure is present	Minimum Distance (ft)	Is the Facility compliant?		NFPA 58 Section Reference (2001)
					Yes	No	
1	Buildings, mobile homes, recreational vehicles, and modular homes with fire-resistive walls			10	NA	NA	Table 3.2.3.3
2	Buildings with other than fire resistive walls			25	NA	NA	
3	Building wall openings or pits at or below the level of the point of transfer			25	NA	NA	
4	Line of adjoining property that can be built upon			25	NA	NA	
5	Outdoor places of public assembly, including school yards, athletic fields, and playgrounds		√	50		√	
6	Public ways, including public streets, highways, thoroughfares, and sidewalks	From points of transfer in LP-Gas dispensing stations and at vehicle fuel dispensers.	√	10	√		
		From other points of transfer	√	25	√		
7	Driveways			5	NA	NA	
8	Mainline railroad track centerlines			25	NA	NA	
9	Containers other than those being filled			10	NA	NA	
10	Flammable and Class II combustible liquid dispensers and aboveground and underground containers			20	NA	NA	Table 3.2.3.3 & 3.2.2.6(e)
11	Flammable and Class II combustible liquid dispensers and the fill connections of LPG containers			10			Table 3.2.3.3
12	LP-Gas dispensing device located close to a Class I liquid dispensing device.			10	NA	NA	3.9.4.3

NOTE: Place a checkmark in column C against an exposure that is present in or around the facility. Fill columns E or F for only those rows for which there is a checkmark in column C.

Table 7.1
Distances to Various Types of Propane Hazards Under Different Release Models**

Model #	Details of the Propane Release Model Releases from or due to		Vapor Dispersion Distance to LFL (ft)	Explosion Hazard Distance (ft)	Fire Ball Radiation Distance (ft)
1A	Bobtail hose failure. Release of the entire inventory in the hose, quickly.	1" ID x 150 ft hose length	250	110	50
1B		1" ID x 120 ft hose length	230	103	45
1C		1" ID x 75 ft hose length	190	90	40
2	Release of the inventory in a transfer piping 1" x 30 ft + @ 20 gpm for 10 min., due to failed excess flow valve.		135	120	25
3	Release from the container pressure relief valve		No ignitable vapor concentration at ground level		
4	Release from a 1" ID x 150 ft length transfer piping to a vaporizer and reduced flow from a partially open excess flow valve @ 20 gpm for 10 min.		250	120	50
5	Leak from a corrosion hole in a transfer pipe at a back pressure of 130 psig (corresponding to 80 ^{o}F) for 60 min. Hole size is ¼" ID.		110	120	5
6	Release of the entire inventory in a 2" ID x 20 ft., transfer hose.		195	90	40
7	Transport hose blowdown: Hose size 2" ID, 20 ft length release for 3min., from a Transport after the tank is filled.		75	30	<5

** Results from models described in Appendix B. The results are rounded to the nearest 5 feet.

Form 7.1
Types of Occupancies(1) Near or Surrounding the LP-Gas Facility

Type of Occupancies	Model from Table 7.1 (2)	Is an Occupancy located within the hazard distance from the Facility?	
		Yes	No
Assembly Occupancies (Places of worship, Libraries, Theaters and Auditoriums, Food or Drink Bars, Sports Stadiums, Amusement Parks, Transportation Centers, etc.).	250	√	
Institutional Occupancies (Elderly Persons Home or Nursing Home, Hospitals, Alcohol & Drug Rehabilitation Centers, Prisons,	250	√	
Educational Occupancies (Elementary Schools, Day Care facilities, etc).			√

NOTES: (1) See Glossary for the definitions of occupancies (Ref: NFPA 5000)

Propane release model #1 from a bobtail hose rupture is selected for the hazard distance.

Form 7.2
Exposure to LP-Gas Plant from External Hazards

A	B	C	D
Item #	**Type of Neighboring Operation**	**Hazard DOES exist to LP-Gas Plant**	
		YES	**NO**
1	Petroleum and other hazardous material storage, wholesale dispensing, etc.		√
2	Metal cutting, welding , and metal fabrication		√
3	Industrial Manufacturing that can pose external hazards		√
4	Ports, rail yards and trans-shipment terminals handling flammable and explosive materials.		√
5	Other operations that may pose hazards (Gasoline and other hazardous material dispensing stations, fertilizer storage, etc).		√

NOTE: If a particular activity indicated in column B does not exist, fill both "YES" and "NO" columns with "N/A".

Form 8.1

Data on the Responding Fire Department

A	B		C
Item #	**Data Item**		**Data Entry**
1	Name of the Fire Department (FD).		
2A	Name of the person in the FD assisting with the data acquisition.		
2B	Position of the person in the FD assisting with the data acquisition.		
3A	Date on which FD data was collected.		
3B	Name of the person collecting the data.		
4	Number of firefighters on duty at any time.		
5	Average number of firefighters available for response.		
6A	Number of firefighters qualified to	"Firefighter I" level.	
6B		"Firefighter II" level.	
7A	Number of firefighters who would	respond on the first alarm to the facility.	
7B		respond on the first alarm and who are qualified to the operations level requirements of NFPA 472 or local requirements	
7C		respond on the first alarm with specific knowledge and training on the properties of LP-Gas and LP-Gas fires.	
8A	Number of fire apparatus that have the capability to deploy a 125 gpm hose line supplied by onboard water for at least 4 minutes, and	that are in service in the department.	
8B		that would respond on a first alarm.	

Form 8.2

Response Time data for the Fire Departments

A	B	C	D	E
Company or Department	**Time in Minutes for**			
	Alarm Receipt & Handling	**Turnout**	**Travel**	**Total Time**

Note: Number in Column E = Sum of numbers from Columns B through D.

Form 8.3

Water Flow Rate and Total Water Volume Required to Cool Containers Exposed to a Fire

A	B	C	D	E	F	G	H
Item #	**ASME Container Size (gallons)**	**Total Surface Area of each Container[iii] (ft^2)**	**Surface Area of each container to be Cooled (ft^2)**	**Water flow rate required per container (gpm)**	**Number of containers of the size indicated**	**Total Water flow rate required/ (gpm)**	**Total volume of water required for 10 min (gal)**
1	500	86	43	10.8			
	1,000	172	86	21.5			
	2,000	290	145	36.3			
	4,000	374	187	46.8			
	6,500	570	285	71.3			
	9,200	790	395	98.8			
	12,000	990	495	123.8			
	18,000	1,160	580	145.0	1	145	
	30,000	1,610	805	201.3			
	45,000	2,366	1,183	295.8			
	60,000	3,090	1,545	386.3			
	90,000	4,600	2,300	575.0			
	Other Size						
2a	Calculated water flow rate for container protection					145	
2b	Water flow rate rounded up to nearest multiple of 125					250	
3	Water for firefighter protection, if required						
4	Total water rate and volume					250	2,500

Note: Column D = (1/2) x Column C Column E = 0.25 (gpm/ft^2) x Column D ;
Column G = Column F x Column E Column H = 10 x Column G
Line 2, Column G and Column H are the sum of numbers in each row above line 2 of each column.
Line 4, Column G and Column H are the sum of numbers in rows 2 and 3.
~ Consider only 3 containers for water supply evaluations even if the number of containers in a group is more than 3.

[i] ASME container dimensions obtained from www.standby.com/products/storage_tanks.html

Form 8.4

Evaluation of Water Availability in or Near the LP-Gas Facility

A	B	C	D		
Item #	**Water from**	**Available?**	**Quantitative information**		
1	Public supply or from another piped-in supply through one or more fire hydrants in or near the facility	☐ Yes ☐ No	Hydrant data	Distance from Facility gate (feet)	Available water flow rate from all hydrants[1] (gpm)
			Hydrant 1		
			Hydrant 2		
			Hydrant 3		
2	A nearby static water source (stream, pond, lake, etc).	☐ Yes ☐ No	Distance to water source = _____ Feet Time to set up relay = _____ min. Rate of delivery = _____ gpm		
3	Only through mobile water tanker shuttle.	☐ Yes ☐ No	Time to set up shuttle = _____ min. Sustainable flow rate = _____ gpm		

NOTE: (1) Obtain the flow rate in each hydrant from the local municipal water authority or the entity that supplies water to the hydrant or conduct a test to determine total available flow rate.

10.4 Illustrative Example # 4

LP-Gas Facility:

A new LP-Gas facility is proposed with four 30,000 gal containers and is to be located in an industrial bulk plant. The facility is to be designed with a railroad unloading terminal and transport unloading stations. The LPG delivery to customers will be by bobtails. Several bobtail loading ports are proposed in the facility. The facility is in an industrial park.

Other Facility Information:

1) This bulk plant is proposed to be located in an area where there are properties close to the facility. Also, there is population surrounding the facility, which may be within the hazard distance. An elementary school exists within the 250 ft distance.
2) Two gates through which the transports enter and leave the facility are proposed.
3) Liquid withdrawal line is manifolded to feed multiple bobtail filling ports.
4) The containers do not have any special protection. However, redundant & fail-safe system is to be provided in the LP-Gas plant. The plant is to be built to conform to NFPA 58, 2001 edition and will fulfill all appurtenance requirements.
5) Two water hydrants are located within the bulk plant. This hydrant is supplied from the town/municipal water supply system. Water is also available from a pond at 5 miles from the facility.
6) The nearest fire department is at a distance of 1 mile and is staffed with career firefighters at all times.

Figure 10.4 shows a schematic plan view of the LP-Gas facility used in Example 4.

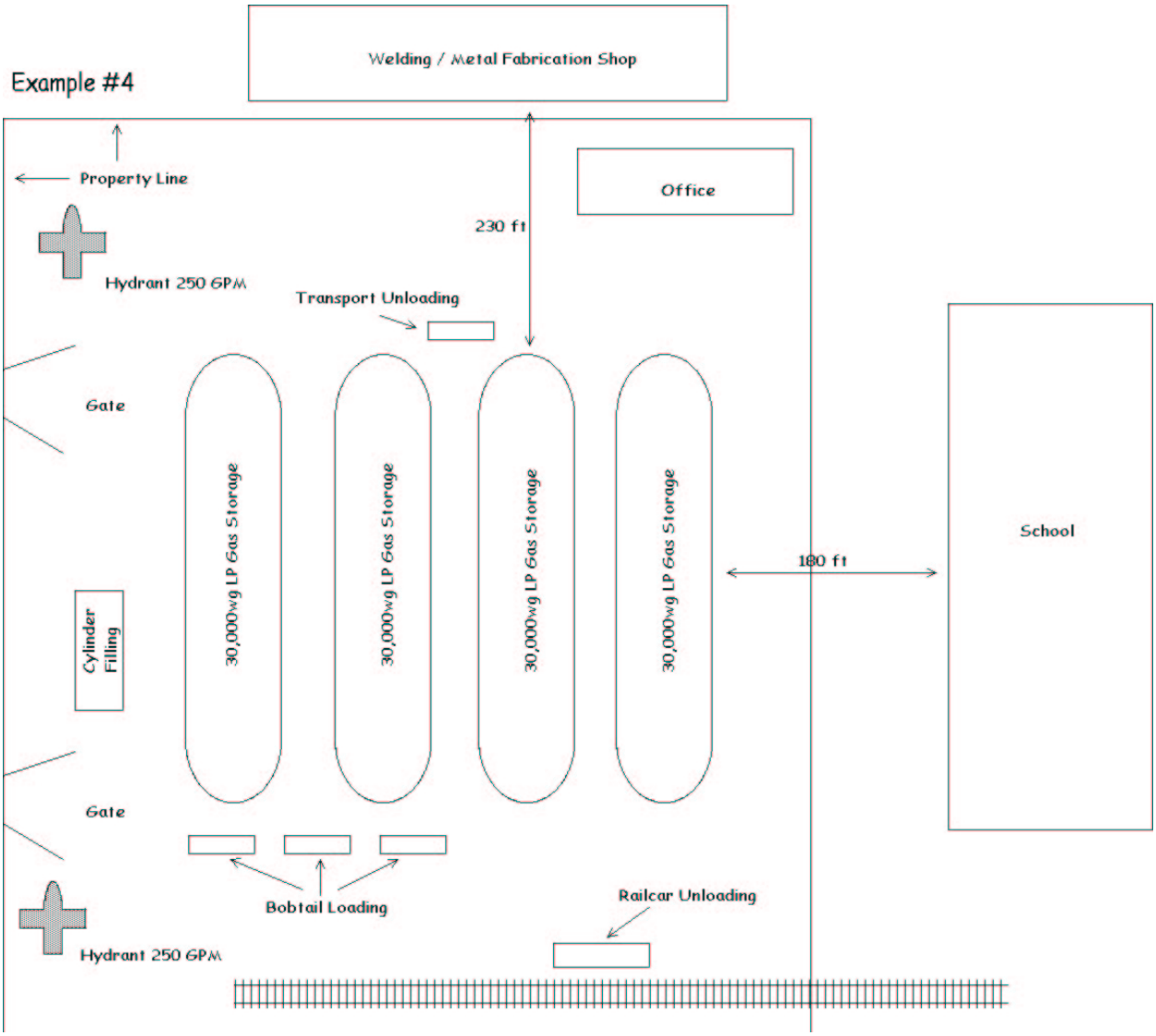

Form 4.1
Initial Data on the LP-Gas Facility

A	B	C
Item #	**Information Item**	**Data**
1	Name of the LP-Gas Plant Owner or Operator	PQR Propane
2	Contact Name:	
3	Contact Telephone & Fax Numbers	
4	Contact Email Address	
5	Mailing Address	Street 1:
		Street 2:
		City, State, Zip: Central City

Form 4.2
Facility Storage Capacity

A	B	C	D
#	**Individual Container Water Capacity (wc) (gallons)**	**Number of containers**	**Total Water Capacity (wc) of each container size (gallons)**
1	500		
	1,000		
	2,000		
	4,000		
	10,000		
	18,000		
	30,000	4	120,000
	60,000		
	Other:		
	Other:		
	Other:		
	Other:		
2	**Aggregate Water Capacity**	4	120,000

Notes:
(1) Column D = Column B x Column C
(2) Do not consider for aggregate capacity calculation above the storage in parked bobtails, transports, and tank cars.
(3) Do not consider containers that are not connected for use.
(4) For the purpose of this analysis, a group of single ASME storage tanks without manifold piping allowing aggregate storage of more than 4,000 GWC or more is **not** considered to trigger the need for an FSA if the containers of 2000 gallons or less are separated by 25 feet or more, and containers of greater than 2000 gallons are separated by 50 ft or more, or by other means acceptable to the authority having jurisdiction.

Form 4.3
Additional Information on the LP-Gas Facility

☐ Existing Facility; Built to NFPA 58 Edition _____ ☑ Proposed Facility (**2001 Edition)**

a) Name of the Plant (if applicable) _____PQR Propane _____

b) Type of LP-Gas Plant: ☐ Commercial ☐ Industrial ☑ Bulk Plant

c) Facility is located in ☐ Rural Area, ☑ Suburban Area, ☐ City Commercial Zone ☐ City Industrial Zone

d) Facility neighbors[§]: (Check all that apply) ☐ Agri fields ☐ Commercial Bldgs ☐ Flammable Liquids Storage ☐ Industrial Activity (metal fabrication, cutting and welding, etc) ☑ Manufacturing ☐ Others (explain) _____

e) Geographic Location of Plant:
Address: _____
_____

f) Landmarks, if any: _____
_____

g) LP-Gas liquid supply by: (Check all that apply) ☐ Bobtail ☑ Truck Transport ☑ Rail Tank Car ☐ Pipeline

h) LP-Gas Distribution by: Plant (Check all that apply) ☑ Bobtail ☐ Truck Transport ☐ Vapor Piping ☐ Liquid Piping ☐ Dispensing or Vehicle fueling

i) Number of vehicle entrances: ☐ One ☑ Two ☐ More than two

j) Type of access roads to the plant: ☐ Rural ☑ City or Town ☐ Highway
(One check per line) Entrance 1 ☐ Dirt road ☐ Gravel road ☑ Paved
(One check per line) Entrance 2 ☐ Dirt road ☐ Gravel road ☑ Paved

k) Staff presence ☐ Not staffed ☐ Only during transfer operations ☐ Staffed always (24/7) ☑ Only during business hours ☐ Other (Explain) _____

l) Location and distances to Institutional Occupancies surrounding the facility, if any, within 250 ft from the facility boundary in the direction of the assets.
___Institutional or other occupancies do exist within 250 ft., of the facility._____
_____

m) Is an overview plot plan of the facility attached? ☑ Yes ☐ No

§ All properties either abutting the LP-Gas facility or within 250 feet of the container or transfer point nearest to facility boundary.

Form 5.4

Compliance with Code Requirements for Appurtenances on Containers Having A Water Capacity Greater than 4,000 gallons Used in Bulk and Industrial Facilities

A	B	C	D	E	F	G
Container #	LP-Gas inlet to and outlet from the container**		Figure #	Total Number of Product Release Control Appurtenances		NFPA 58 Section Reference (2001)
				Required by NFPA 58 (applicable edition)	Installed on the container	
1	Vapor	Inlet	5.2			3.3.3.6 (a)
		Outlet	5.3-2	3	3	3.3.3.6 (c)
	Liquid	Inlet	5.6-2	4	4	3.3.3.6 (b)(2)
		Outlet	5.7-2	4	4	3.3.3.6 (d)(2)

** If the container does not provide an opening for the specific function listed, enter 0 (zero) in columns E and F corresponding to that row.

Form 5.5

Requirements for Manifolded Transfer Lines Larger than 1½-inch diameter, Liquid-into-Containers

A	B	C	D	E	F
#	Appurtenance	Appurtenance Provided with the Feature	Installed in the facility?		NFPA 58 Section Reference (2001)
			Yes	No	
1	Emergency Shutoff Valve (ESV)	Installed within 20 ft. of lineal pipe from the nearest end of the hose or swivel-type connections.	√		3.2.19.2
		Automatic shutoff thorough thermal (fire) actuation with melting point of thermal element less than 250 °F	√		3.2.19.4
		Temperature sensitive element (fusible link) installed within 5 ft from the nearest end of the hose or swivel type piping connected to liquid transfer line,	√		3.2.19.4
		Manual shutoff feature provided at ESV installed location.	√		3.2.19.8
		Manual shutoff device provided at a remote location, not less than 25 ft., and not more than 100 ft. from the ESV.	√		3.2.19.8
		An ESV is installed on each leg of a multi leg piping each of which is connected to a hose or a swivel type connection on one side and to a header of size larger than 1½ inch in diameter on the other side.	√		3.2.19.3 4.2.3.6(a)

Form 5.5 (continued)

A	B	C	D	E	F
#	Appurtenance	Appurtenance Provided with the Feature	Installed in the facility?		NFPA 58 Section Reference
			Yes	No	
	Emergency Shutoff Valve (continued)	Breakaway stanchion is provided such that in any pull-away break will occur on the hose or swivel-type connection side while retaining intact the valves and piping on the plant side.	√		3.2.19.6
2	Back flow Check Valve (BCKV)**	Installed downstream of the hose or swivel-type connection	√		3.2.19.6
		BCKV is designed for this specific application.	√		3.2.19.2 *Exception*
		A BCKV is installed on each leg of a multi leg piping each of which is connected to a hose or a swivel type connection on one side and to a header of size 1½ inch or larger in diameter on the other side.	√		3.2.19.3
		Breakaway stanchion is provided such that in any pull-away break will occur on the hose or swivel-type connection side while retaining intact the valves and piping on the plant side.	√		3.2.19.6

** The backflow check valve (BCK) is only permitted when flow is only into the container and shall have a metal-to-metal seat or a primary resilient seat with metal backup, not hinged with a combustible material.

Form 5.6

Requirements for Manifolded Transfer Lines of larger than 1½ inch diameter, Liquid withdrawal from containers

A	B	C	D	E	F
#	Appurtenance	Appurtenance Provided with the Feature	Installed in the facility?		NFPA 58 Section Reference
			Yes	No	
3	Emergency Shutoff Valve (ESV)	Installed within 20 ft. of lineal pipe form the nearest end of the hose or swivel-type connections.	√		3.2.19.2
		Automatic shutoff thorough thermal (fire) actuation with melting point of thermal element < 250 ^{o}F	√		3.2.19.4
		Temperature sensitive element installed within 5 ft from the nearest end of the hose or swivel type piping connected to liquid transfer line,	√		3.2.19.4
		Manual shutoff feature provided at E SV installed location.	√		3.2.19.8
		Manual shutoff device provided at a remote location, not less than 25 ft., and not more than 100 ft. from the ESV.	√		3.2.19.8
		An ESV is installed on each leg of a multi leg piping each of which is connected to a hose or a swivel type connection on one side and to a header of size larger than 1½ inch in diameter on the other side.	√		3.2.19.3 4.2.3.6(a)
		Breakaway stanchion is provided such that in any pull-away break will occur on the hose or swivel-type connection side while retaining intact the valves and piping on the plant side.	√		3.2.19.6
		Number of ESV's in liquid withdrawal service	2		

Note: If more than one ESV is installed in the facility, use one Form 5.6 for each ESV.

Form 5.8
Evaluation of Redundant and Fail-Safe Design
(For Liquid and Vapor Withdrawal Openings 1¼-in diameter or larger)

A	B		C	D	E	F
#	Item		Features	Installed in the facility?		NFPA 58 Section Reference (2001)
				Yes	No	
1	Container Sizes for which the appurtenances are provided		Redundant Fail-Safe equipment and Low Emission transfer lines are provided for each container of water capacity 2,001 gal to 30,000 gal	√		3.11
2	**LIQUID SIDE** Internal Valve or Back flow Check valve and Positive Shutoff Valve		Internal Valve with integral excess flow valve or excess flow protection or Back Flow Check valve	√		3.11.3.1
			Positive Shutoff Valve installed as close as possible to the Internal Valve or the back flow check valve	√		3.11.3.2
3	**VAPOR SIDE** Internal Valve or Back flow Check valve and Positive Shutoff Valve		Internal Valve with integral excess flow valve or excess flow protection or Back Flow Check valve	√		3.11.3.3
			Positive Shutoff Valve installed as close as possible to the Internal Valve or the back flow check valve	√		3.11.3.2
4	Emergency Shutoff Valve at transfer points into or out of	Railroad tank car	Valve installed in the transfer hose or the swivel-type piping at the tank car end	√		4.2.3.6(a) 4.2.3.6(b)
		Cargo tank vehicle	Installed in piping so that any pull-away break in the hose or piping will retain the valve and piping on the plant side of connection.	√		3.2.19.6
5	Backflow Check Valve at transfer points into or out of	Railroad tank car	Valve installed in the transfer hose or the swivel-type piping at the tank car end when flow is into tank car	NA		4.2.3.6(a)
		Cargo tank vehicle	Installed in piping so that any pull-away break in the hose or piping will retain the valve and piping on the plant side of connection.	NA		3.2.19.6
6	Automatic closure of all primary valves (IV & ESV) in an Emergency		By fire actuation	√		3.11.3.1
			In the event of a hose pull-away due to vehicle motion	√		3.11.4.2
7	Manually operated remote shutdown of IV and ESV		Remote shutdown station within 15 ft of the point of transfer?	√		3.11.4.3(a)
			Another remote shutdown station between 25 ft and 100 ft of the transfer point?	√		3.11.4.3(b)
			Shutdown stations will also turn off electrical power supply, if any, to the valves?	√		3.11.4.3
			Large letter signs complying with the requirements of 3.11.4.3 (c) provided?	√		3.11.4.3(c)

Form 6.1
Evaluation of Physical Protection and Other Measures

A	B	C	D	E	F
#	Item	Features	Installed in the facility?		NFPA 58 Section Reference (2001)
			Yes	No	
1	Lighting‡	For nighttime operations adequate lighting provided to illuminate storage containers, container being loaded, control valves, and other equipment	√		3.3.7
2	Vehicle impact protection	Protection against vehicular (traffic) impacts on containers, transfer piping and other appurtenances is designed and provided commensurate with the size of vehicles and type of traffic in the facility. (Example protection systems include but not limited to (1) Guard rails, (2) Steel bollards, (3) Raised sidewalks.	√		2.3.7.2 3.2.15.7
3	Protection against corrosion	Is the above ground piping in contact with a support or a corrosion causing substance protected against corrosion?	√		3.2.15.7
Complete only 4A or 4B					
4A	Perimeter Fence	Has an industrial type or chain link fence of at least 6 ft high or equivalent protection provided to enclose (all around) container appurtenances, pumping equipment, loading and unloading and container filling facilities?	√		3.3.6.1
		Has at least two means of emergency accesses (gates) from the enclosure provided? **NOTE:** (i) A second gate is not required when, (vii) the area enclosed is less than 100 ft^2, or (viii) the point of transfer is within 3 ft of the gate, or containers are not filled within the enclosure	√		3.3.6.1 and associated Exception 1
		Has a clearance of, at least, 3 feet all around to allow emergency access to the required means of egress been provided?	√		3.3.6.1
	Guard Service	If a guard service is provided, is this service extended to LP-Gas plant and are the guard personnel provided with appropriate LP-Gas related training, per section 1.5 of NFPA 58?	NA		3.3.6.1
4B	Lock-in-Place devices	Are Lock-in-Place devices provided to prevent unauthorized use or operation of any container appurtenance, system valves, equipment in lieu of the fence requirements above?	NA		3.3.6.1 or 3.3.6.2

Fill only items 1, 2, 3, and 4A or 4B. Leave blank or indicate by "NA" when not filling the "YES" or "NO" column.

‡ Leave blank if the facility is not operated in the night.

Form 6.2
Ignition Source Control Assessment

A	B	C	D	E
#	Ignition Control Requirement	Is the Facility compliant?		NFPA 58 Section Reference (2001)
		Yes	No	
1	Combustible materials, weeds and tall grass not closer than 10 ft from each container?	√		3.2.2.6
2	Distance is at least 20 ft between containers and tanks containing flammable liquids with flash point < 200 F (ex., gasoline)	√		3.2.3.3
3	Electrical equipment and wiring are installed per Code requirements.	√		3.7.2
4	Open flame equipment are located and used according to Code.	√		3.7.3
5	Ignition control procedures and requirements during liquid transfer operations are complied with.	√		4.2.3.2
6	An approved, portable, dry chemical fire extinguisher of minimum capacity 18 Lbs and having a B:C rating is provided in the plant	√		3.10.2.4
7	An approved, portable, dry chemical fire extinguisher is provided for each vehicle as required	√		6.2.4
8	Prohibition on smoking within the plant premises strictly enforced	√		4.2.3.2 & 6.3.10

Form 6.3

Separation Distances from Containers to Buildings, Property line that can be built upon, and inter-container distances

A	B	C	D	E	F	G
#	Container Size Range in gal (W.C.)	Separation Between A property line, important building or other property and the nearest container which is	Minimum Distance (ft)	Is the Facility compliant? Yes	Is the Facility compliant? No	NFPA 58 Section Reference (2001)
1	501 to 2,000	Above Ground	25	NA	NA	Table 3.2.2.2
		Underground or Mounded	10	NA	NA	
		Between containers	3	NA	NA	
2	2,001 to 30,000	Above Ground	50	√		
		Underground or Mounded	50	NA	NA	
		Between containers	5	√		
3	30,001 to 70,000	Above Ground	75	NA	NA	
		Underground or Mounded	50	NA	NA	
		Between containers	¼ sum of diameters of adjacent containers	NA	NA	
4	70,001 to 90,000	Above Ground	100	NA	NA	
		Underground or Mounded	50	NA	NA	
		Between containers	¼ sum of diameters of adjacent containers	NA	NA	
5	All sizes greater than 125 gal	Separation distance between a LP-Gas container and an above ground storage tank containing flammable or combustible liquids of flash points below 200 ^{o}F.	20	√		3.2.2.6 (e)

Note: If any of the container sizes indicated in the above form is not present in the facility, write "NA" in both Yes and No columns. Do not count them for compliance with the code.

Form 6.4
Separation Distances between Points of Transfer and other Exposures

A	B		C	D	E	F	G
#	Type of Exposure within or outside the facility boundary		Check if exposure is present	Minimum Distance (ft)	Is the Facility compliant?		NFPA 58 Section Reference
					Yes	No	(2001)
1	Buildings, mobile homes, recreational vehicles, and modular homes with fire-resistive walls			10	NA	NA	Table 3.2.3.3
2	Buildings with other than fire resistive walls			25	NA	NA	
3	Building wall openings or pits at or below the level of the point of transfer			25	NA	NA	
4	Line of adjoining property that can be built upon			25	NA	NA	
5	Outdoor places of public assembly, including school yards, athletic fields, and playgrounds		√	50	√		
6	Public ways, including public streets, highways, thoroughfares, and sidewalks	From points of transfer in LP-Gas dispensing stations and at vehicle fuel dispensers.	√	10	√		
		From other points of transfer	√	25	√		
7	Driveways			5	NA	NA	
8	Mainline railroad track centerlines		√	25	√		
9	Containers other than those being filled			10	NA	NA	
10	Flammable and Class II combustible liquid dispensers and aboveground and underground containers			20	NA	NA	Table 3.2.3.3 & 3.2.2.6(e)
11	Flammable and Class II combustible liquid dispensers and the fill connections of LPG containers			10			Table 3.2.3.3
12	LP-Gas dispensing device located close to a Class I liquid dispensing device.			10	NA	NA	3.9.4.3

NOTE: Place a checkmark in column C against an exposure that is present in or around the facility. Fill columns E or F for only those rows for which there is a checkmark in column C.

Form 6.5
Protection Against Vehicular Impact

#	System Protected	Is physical protection provided?		Type of physical protection installed
		Yes	No	
1	Storage containers	√		Jersey Barriers
2	Transfer stations	√		Concrete Bollards
3	Entry way into the plant	NA		

Table 7.1
Distances to Various Types of Propane Hazards Under Different Release Models**

Model #	Details of the Propane Release Model Releases from or due to		Vapor Dispersion Distance to LFL (ft)	Explosion Hazard Distance (ft)	Fire Ball Radiation Distance (ft)
1A	Bobtail hose failure. Release of the entire inventory in the hose, quickly.	1" ID x 150 ft hose length	250	110	50
1B		1" ID x 120 ft hose length	230	103	45
1C		1" ID x 75 ft hose length	190	90	40
2	Release of the inventory in a transfer piping 1" x 30 ft + @ 20 gpm for 10 min., due to failed excess flow valve.		135	120	25
3	Release from the container pressure relief valve		No ignitable vapor concentration at ground level		
4	Release from a 1" ID x 150 ft length transfer piping to a vaporizer and reduced flow from a partially open excess flow valve @ 20 gpm for 10 min.		250	120	50
5	Leak from a corrosion hole in a transfer pipe at a back pressure of 130 psig (corresponding to 80 ^{o}F) for 60 min. Hole size is ¼" ID.		110	120	5
6	Release of the entire inventory in a 2" ID x 20 ft., transfer hose.		195	90	40
7	Transport hose blowdown: Hose size 2" ID, 20 ft length release for 3min., from a Transport after the tank is filled.		75	30	<5

** Results from models described in Appendix B. The results are rounded to the nearest 5 feet.

Form 7.1
Types of Occupancies(1) Near or Surrounding the LP-Gas Facility

Type of Occupancies	Model from Table 7.1 (2)	Is an Occupancy located within the hazard distance from the Facility?	
		Yes	No
Assembly Occupancies (Places of worship, Libraries, Theaters and Auditoriums, Food or Drink Bars, Sports Stadiums, Amusement Parks, Transportation Centers, etc.).	250		√
Institutional Occupancies (Elderly Persons Home or Nursing Home, Hospitals, Alcohol & Drug Rehabilitation Centers, Prisons,	250		√
Educational Occupancies (Elementary Schools, Day Care facilities, etc).	250	√	

NOTES: (1) See Glossary for the definitions of occupancies (Ref: NFPA 5000)

Form 7.2

Exposure to LP-Gas Facility from External Hazards

(within 250 ft of the container and transfer area)

A	B	C	D
Item #	**Type of Neighboring Operation**	**Hazard DOES exist to LP-Gas Plant**	
		YES	**NO**
1	Petroleum and other hazardous material storage, wholesale dispensing, etc.		√
2	Metal cutting, welding , and metal fabrication	√	
3	Industrial Manufacturing that can pose external hazards		√
4	Ports, rail yards and trans-shipment terminals handling flammable and explosive materials.		√
5	Other operations that may pose hazards (Gasoline and other hazardous material dispensing stations, fertilizer storage, etc).		√

NOTE: If a particular activity indicated in column B does not exist, fill both "YES" and "NO" columns with "N/A".

Form 8.1
Data on the Responding Fire Department

A	B		C
Item #	**Data Item**		**Data Entry**
1	Name of the Fire Department (FD).		XYZ
2A	Name of the person in the FD assisting with the data acquisition.		John Smith
2B	Position of the person in the FD assisting with the data acquisition.		Captain
3A	Date on which FD data was collected.		3/11/04
3B	Name of the person collecting the data.		Bill Thomas
4	Number of firefighters on duty at any time.		12
5	Average number of firefighters available for response.		9
6A	Number of firefighters qualified to	"Firefighter I" level.	10
6B		"Firefighter II" level.	7
7A	Number of firefighters who would	respond on the first alarm to the facility.	8
7B		respond on the first alarm and who are qualified to the operations level requirements of NFPA 472 or local requirements	4
7C		respond on the first alarm with specific knowledge and training on the properties of LP-Gas and LP-Gas fires.	4
8A	Number of fire apparatus that have the capability to deploy a 125 gpm hose line supplied by onboard water for at least 4 minutes, and	that are in service in the department.	2
8B		that would respond on a first alarm.	2

Form 8.2
Response Time data for the Fire Departments

A	B	C	D	E
Company or Department	**Time in Minutes for**			
	Alarm Receipt & Handling	**Turnout**	**Travel**	**Total Time**
Springfield FD	1	2	6	9

Note: Number in Column E = Sum of numbers from Columns B through D.

Form 8.3

Water Flow Rate and Total Water Volume Required to Cool Containers Exposed to a Fire

A	B	C	D	E	F	G	H
Item #	**ASME Container Size (gallons)**	**Total Surface Area of each Container[iv] (ft^2)**	**Surface Area of each container to be Cooled (ft^2)**	**Water flow rate required per container (gpm)**	**Number of containers of the size indicated**	**Total Water flow rate required/ (gpm)**	**Total volume of water required for 10 min (gal)**
1	500	86	43	10.8			
	1,000	172	86	21.5			
	2,000	290	145	36.3			
	4,000	374	187	46.8			
	6,500	570	285	71.3			
	9,200	790	395	98.8			
	12,000	990	495	123.8			
	18,000	1,160	580	145.0			
	30,000	1,610	805	201.3	4	604	
	45,000	2,366	1,183	295.8			
	60,000	3,090	1,545	386.3			
	90,000	4,600	2,300	575.0			
	Other Size						
2a	Calculated water flow rate for container protection					604	
2b	Water flow rate rounded up to nearest multiple of 125					625	
3	Water for firefighter protection, if required						
4	Total water rate and volume					625	6,250

Note: Column D = (1/2) x Column C Column E = 0.25 (gpm/ft^2) x Column D ;
Column G = Column F x Column E Column H = 10 x Column G
Line 2, Column G and Column H are the sum of numbers in each row above line 2 of each column.
Line 4, Column G and Column H are the sum of numbers in rows 2 and 3.
~ Consider only 3 containers for water supply evaluations even if the number of containers in a group is more than 3.

[i] ASME container dimensions obtained from www.standby.com/products/storage_tanks.html

Form 8.4

Evaluation of Water Availability in or Near the LP-Gas Facility

A	B	C	D		
Item #	**Water from**	**Available?**	**Quantitative information**		
1	Public supply or from another piped-in supply through one or more fire hydrants in or near the facility	X Yes ☐ No	Hydrant data	Distance from Facility gate (feet)	Available water flow rate from all hydrants[1] (gpm)
			Hydrant 1	100	500
			Hydrant 2		
			Hydrant 3		
2	A nearby static water source (stream, pond, lake, etc).	☐ Yes X No	Distance to water source = _____ Feet Time to set up relay = _____ min. Rate of delivery = _____ gpm		
3	Only through mobile water tanker shuttle.	☐ Yes X No	Time to set up shuttle = _____ min. Sustainable flow rate = _____ gpm		

NOTE: (1) Obtain the flow rate in each hydrant from the local municipal water authority or the entity that supplies water to the hydrant or conduct a test to determine total available flow rate.

Evaluation Summary for the Proposed LP-Gas Facility

Form 9.2
Analysis Summary on Exposure from and to the LP-Gas Facility

A	B	C	D	E
Item #	**CHAPTER Title**	**Section & Title**	**Reference FORM #**	**Number of "YES" checked**
1	Exposure to and from Other Properties	7.1 Exposure to off-site properties and persons from in-plant propane releases	7.1	**1**
		7.2 Exposure to propane facility from external events.	7.2	**1**

If the entry number in column E ("YES"), Form 9.2 corresponding to Form 7.1 is greater than zero, implement one or more of the following corrective actions.

1 Consider moving the container or the transfer point to a different location, if possible and space exists, so that the property or the person is beyond the hazard distance**.**
2 Provide "Redundant and Fail-safe Product Control Measures". Complete Form 9.4 to ensure compliance.
3 Institute other technical measures such as installing gas and flame detectors (connected to facility shut down systems), sounding alarm outside facility premises, etc.
4 Institute administrative controls such as additional training for personnel, more frequent inspection of hoses and transfer piping, etc.

If the entry number in column E ("YES"), Form 9.2 corresponding to Form 7.2 is greater than zero, implement one or more of the following corrective actions.

1 Implement procedures to monitor neighboring activity.
2 Install means in the adjacent plant to shut down the LP-Gas plant in case emergency in that plant.

Form 9.3
Analysis Summary on Fire Department Evaluations

A	B	C	D	E	F
Item #	**CHAPTER Title**	**Section & Title**	**Reference FORM #**	**Number "zeros" entered in Lines 6 through 8**	**Number of "Yes" checked in Column C**
1	Fire department capability, adequacy of water supply and Emergency Planning	8.1 Data on the Fire Department	8.1	0	
2		8.2 Fire response water needs and availability	8.4		1

If the entry number in Cell 1, Column E of Form 9.3 is greater than zero, consider one or more of the following design alternatives.

1 Discuss with the local Fire Department the needs of the LP-Gas facility and the evaluation results on the capability and training inadequacies of the Department.
2 Consider developing a cadre of personnel within the LP-Gas facility to respond to emergencies.
3 Institute container special protection system based on active protection approaches or passive approaches. Complete Form 9.6 and Form 9.7 below.

If the entry number in Cell 2, Column F of Form 9.3 is equal to zero, consider one or more of the following design alternatives.

1 Provide special protection (other than water spray or monitor systems) to containers, satisfying the requirements of section 3.10.3 of NFPA Code. Complete Form 9.6 to ensure compliance.
2 Consider implementing the various options indicated in Table 9.1.

Form 9.6
Special Protection Measures –Passive Systems

A	B	C	D		E
#	Special Protection Option	Question	Proposed for the facility?		NFPA 58 Section Reference
			Yes	No	
1	Insulation around the container	Insulation provided on each of the containers?		√	3.10.3.1
		Insulation material complies with the requirements of section 3.10.3.1 of NFPA 58?		√	3.10.3.1
2	Mounding of containers	Each container in the facility is mounded?	√		3.10.3.2
		Mounding complies with each requirement under section 3.2.9.3 of NFPA 58.	√		3.10.3.2
3	Burying of containers	Each container in the facility is buried?		√	3.10.3.3
		Buried containers comply with each requirement under section 3.2.9.1 of NFPA 58.		√	3.10.3.3 and 3.2.9.1

1) For an existing facility, communicate this information to local emergency responders for inclusion in their emergency planning.
2) For a proposed facility, refer to Chapter 9.

Glossary and Acronyms

GLOSSARY

Advisory Committee: An advisory panel of members from the propane industry, set up by the NPGA to review the technical work and provide guidance during the preparation of this FSA manual.

Bulk Plant: A facility whose primary purpose is to store LP-Gas in large quantities and distribute it by trucks, bobtails or cylinders.

Commercial Plant: A facility in which LP-Gas is stored on site and used in an office building, a restaurant, a building construction site, an apartment complex, a fast-food place, etc.

Facility: A facility refers to a stationary plant handling, storing or transferring LP-Gas.

High Value Populations: Schools, hospitals, old peoples' homes, police or fire stations, playgrounds, churches, swimming pools, etc.

Industrial Plant: A facility in which LP-Gas is stored on site and used in a factory, a fabrication shop, a repair garage, a warehouse, a place where a product is manufactured or produced, an agricultural processing plant, a chemical process plant, etc.

Installation: An installation is a facility containing one or more LP-Gas ASME storage tanks used to store LP-Gas in the form of a pressurized liquefied gas.

ACRONYMS

AHJ	Authority having jurisdiction
EPA	US Environmental Protection Agency
EAP	Emergency Action Plan (for the LP-Gas plant)
FD	(Local) Fire Department nearest to the Plant
FSA	Fire Safety Analysis (performed to satisfy the requirements of NFPA 58, section 3.10)
NFPA	National Fire Protection Association
NPGA	National Propane Gas Association
OSHA	US Occupational Safety and Health Administration (of the US Department of Labor)

Technical References

NFPA 58, "Liquefied Petroleum Gas Code, 2001 Edition," Published by the National Fire Protection Association, Quincy, MA

EPA(1999): "Risk Management Program Guidance for Off-site Consequence Analysis," Publication (EPA-550-B-99-009) of the Office of Solid Waste and Emergency Response, US Environmental Protection Agency, Washington DC, April 1999.

D.B. Turner (1970), "Workbook of Atmospheric Dispersion Estimates," Publication of the Office of Air Programs, US Environmental Protection Agency, Research Triangle Park, NC, 1970.

Appendix A

Fill-in Tables/Forms

This Appendix contains a set of forms copied from the different chapters in this manual. The form number corresponds to the respective forms in chapters 4 through 9; the first number digit represents the chapter number. Where the forms refer to a figure, it is understood that they refer to the figures shown in the main body of the manual.

It is anticipated that these tables will be photocopied and used (as many times as needed) to perform the Fire Safety Analysis of one or more LP-Gas facilities. The details of how to use the tables and what the results mean are indicated in the respective chapters; the user should refer to the information in the various chapters before using these tables.

The filled in tables may then be included in the written Fire Safety Analysis that has to be maintained by the LP-Gas facility owner/operator. If a need exists, the same report may be submitted to the Authority Having Jurisdiction (AHJ).

Form 4.1
Initial Data on the LP-Gas Facility

A	B	C
Item #	**Information Item**	**Data**
1	Name of the LP-Gas Plant Owner or Operator	
2	Contact Name:	
3	Contact Telephone & Fax Numbers	
4	Contact Email Address	
5	Mailing Address	Street 1:
		Street 2:
		City, State, Zip:

Form 4.2
Facility Storage Capacity[1,2,3]

A	B	C	D
#	**Individual Container Water Capacity (wc) (gallons)**	**Number of containers**	**Total Water Capacity (wc) of each container size (gallons)**
1	500		
	1,000		
	2,000		
	4,000		
	10,000		
	18,000		
	30,000		
	60,000		
	Other:		
	Other:		
	Other:		
	Other:		
2	**Aggregate Water Capacity[4]**		

Notes:
(1) Column D = Column B x Column C.
(2) Parked bobtails, transports and tank cars should not be considered for aggregate capacity calculations.
(3) Do not consider containers that are not connected for use.
(4) For the purpose of this manual, "Aggregate Water Capacity" means a group of single ASME storage tanks connected together with manifold piping.

Form 4.3
Additional Information on the LP-Gas Facility

☐ Existing Facility; Built to NFPA 58 Edition _____ ☐ Proposed Facility

a) Name of the Facility (if applicable) _____

b) Type of LP-Gas Facility ☐ Commercial ☐ Industrial ☐ Bulk Plant

c) Facility is located in ☐ Rural Area, ☐ Suburban Area, ☐ City Commercial Zone
☐ City Industrial Zone

d) Facility neighbors[§]: ☐ Agri. fields ☐ Commercial Bldgs. ☐ Flammable Liquids Storage
(Check all that apply) ☐ Industrial Activity (metal fabrication, cutting and welding, etc)
☐ Manufacturing ☐ Others (explain) _____

e) Geographic Location of Facility/Address: _____
_____

f) Landmarks, if any: _____
_____

g) LP-Gas liquid supply by: ☐ Bobtail ☐ Truck Transport ☐ Rail Tank Car
(Check all that apply) ☐ Pipeline

h) LP-Gas Distribution by: ☐ Bobtail ☐ Truck Transport ☐ Vapor Piping
(Check all that apply) ☐ Liquid Piping ☐ Dispensing or Vehicle Liquid fueling

i) Number of Vehicle Entrances: ☐ One ☐ Two ☐ More than two

j) Type of Access Roads to the Facility ☐ Rural ☐ City or Town ☐ Highway
(One check per line) Entrance 1 ☐ Dirt road ☐ Gravel road ☐ Paved
(One check per line) Entrance 2 ☐ Dirt road ☐ Gravel road ☐ Paved

k) Staff presence ☐ Not staffed ☐ Only during transfer operations
☐ Staffed always (24/7) ☐ Only during business hours
☐ Other (Explain) _____

l) Location and distances to Institutional Occupancies surrounding the facility, if any, within 250 ft from the facility boundary in the direction of the assets.
_____
_____

m) Overview plot plan of the facility attached? ☐ Yes ☐ No

§ All properties either abutting the LP-Gas facility or within 250 feet of the container or transfer point nearest to facility boundary.

Form 5.1

Compliance with Code Requirements for Appurtenances on Containers of 2,000 Gallons Water Capacity or Less

A	B	C	D	E
Container #	Service Configuration Sub Figure (in Figure 5.1)	Number of Product Release Control Appurtenances		NFPA 58 Section Reference (2001 edition)
		Required by NFPA 58 (applicable edition)	Installed on the Container	
1				2.3.3.2(a) and Table 2.3.3.2(a)
2				
3				
4				
5				
6				

If, in Form 5.1, any one of the numbers in column D is less than the number in Column C of the corresponding row, these items must be addressed and brought into compliance with the specific edition of NFPA 58 that the facility was constructed to.

Form 5.2

Compliance with Code Requirements for Appurtenances on Containers Greater Than 2,000 through 4,000 Gallons Water Capacity Used in Residential and Commercial Facilities

A	B	C	D	E
Container #	Service Configuration Sub Figure (in Figure 5.1)	Number of Product Release Control Appurtenances		NFPA 58 Section Reference (2001 edition)
		Required by NFPA 58 (applicable edition)	Installed on the Container	
1				2.3.3.2(a) and Table 2.3.3.2 (a)
2				
3				
4				
5				
6				

If, in Form 5.2, any one of the numbers in column D is less than the number in Column C of the corresponding row, these items must be addressed and brought into compliance with the specific edition of NFPA 58 that the facility was constructed to.

Form 5.3

Compliance with Code Requirements for Appurtenances on Containers Having a Water Capacity of 2,001 through 4,000 Gallons Used in Bulk and Industrial Facilities

A	B	C	D	E	F	G
Container #	LP-Gas inlet to and outlet from the container**		Figure #	Total Number of Product Release Control Appurtenances		NFPA 58 Section Reference (2001 edition)
				Required by NFPA 58 (applicable edition)	Installed on the container	
1	Vapor	Inlet	5-2			3.3.3.6 (a)
		Outlet	5-3			3.3.3.6 (c)
	Liquid	Inlet	5-4			3.3.3.6 (b)(1)
		Outlet	5-5			3.3.3.6 (d)(1)
2	Vapor	Inlet	5-2			
		Outlet	5-3			
	Liquid	Inlet	5-4			
		Outlet	5-5			
3	Vapor	Inlet	5-2			
		Outlet	5-3			
	Liquid	Inlet	5-4			
		Outlet	5-5			
4	Vapor	Inlet	5-2			
		Outlet	5-3			
	Liquid	Inlet	5-4			
		Outlet	5-5			

** If the container does not provide an opening for the specific function listed, enter 0 (zero) in columns E and F corresponding to that row.

If, in Form 5.3, any one of the numbers in column F is less than the number in Column E of the corresponding row, these items must be addressed and brought into compliance with the specific edition of NFPA 58 that the facility was constructed to.

Form 5.4

Compliance with Code Requirements for Appurtenances on Containers Having a Water Capacity Greater Than 4,000 Gallons Used in Bulk and Industrial Facilities

A	B	C	D	E	F	G
Container #	**LP-Gas inlet to and outlet from the container****		**Figure #**	**Total Number of Product Release Control Appurtenances**		**NFPA 58 Section Reference (2001 edition)**
				Required by NFPA 58 (applicable edition)	**Installed on the container**	
1	**Vapor**	Inlet	5.2			3.3.3.6 (a)
		Outlet	5.3			3.3.3.6 (c)
	Liquid	Inlet	5.6			3.3.3.6 (b)(2)
		Outlet	5.7			3.3.3.6 (d)(2)
2	**Vapor**	Inlet	5.2			
		Outlet	5.3			
	Liquid	Inlet	5.6			
		Outlet	5.7			
3	**Vapor**	Inlet	5.2			
		Outlet	5.3			
	Liquid	Inlet	5.6			
		Outlet	5.7			
4	**Vapor**	Inlet	5.2			
		Outlet	5.3			
	Liquid	Inlet	5.6			
		Outlet	5.7			

** If the container does not provide an opening for the specific function listed, enter 0 (zero) in columns E and F corresponding to that row.

If in Form 5.4 any one of the numbers in column F is less than the number in Column E of the corresponding row, these items must be addressed and brought into compliance with the specific edition of NFPA 58 that the facility was constructed to.

Form 5.5
Requirements for Transfer Lines of 1½-inch Diameter or Larger, Liquid-into-Containers

A	B	C	D	E	F
Item #	**Appurtenance (Either No. 1 or No. 2)****	**Appurtenance Provided with the Feature**	**Installed in the facility?**		**NFPA 58 Section Reference (2001 edition)**
			Yes	**No**	
1	Emergency Shutoff Valve (ESV)	Installed within 20 ft. of lineal pipe from the nearest end of the hose or swivel-type connections.			3.2.19.2
		Automatic shutoff through thermal (fire) actuation with melting point of thermal element < 250 ^{o}F			3.2.19.4
		Temperature sensitive element (fusible link) installed within 5 ft from the nearest end of the hose or swivel type piping connected to liquid transfer line,			3.2.19.4
		Manual shutoff feature provided at ESV installed location.			3.2.19.8
		Manual shutoff device provided at a remote location, not less than 25 ft., and not more than 100 ft. from the ESV.			3.2.19.8
		An ESV is installed on each leg of a multi leg piping each of which is connected to a hose or a swivel type connection on one side and to a header of size 1½ inch in diameter or larger on the other side.			3.2.19.3 4.2.3.6(a)
		Breakaway stanchion is provided such that in any pull-away break will occur on the hose or swivel-type connection side while retaining intact the valves and piping on the plant side.			3.2.19.6
			Yes	**No**	
2	Back flow Check Valve (BCK)**	Installed downstream of the hose or swivel-type connection			3.2.19.6
		BCK is designed for this specific application.			3.2.19.2 *Exception*
		A BCK is installed on each leg of a multi leg piping each of which is connected to a hose or a swivel type connection on one side and to a header of 1½ inch in diameter or larger on the other side.			3.2.19.3
		Breakaway stanchion is provided such that in any pull-away break will occur on the hose or swivel-type connection side while retaining intact the valves and piping on the plant side.			3.2.19.6

** The backflow check valve (BCK) is only permitted when flow is only into the container and shall have a metal-to-metal seat or a primary resilient seat with metal backup, not hinged with a combustible material.

Form 5.6

Requirements for Transfer Lines of 1½-inch Diameter or Larger, Liquid Withdrawal From Containers

A	B	C	D	E	F
Item #	**Appurtenance**	**Appurtenance Provided with the Feature**	**Installed in the facility?**		**NFPA 58 Section Reference**
			Yes	**No**	
1	Emergency Shutoff Valve (ESV)	Installed within 20 ft. of lineal pipe form the nearest end of the hose or swivel-type connections.			3.2.19.2
		Automatic shutoff through thermal (fire) actuation with melting point of thermal element < 250 ^{o}F			3.2.19.4
		Temperature sensitive element installed within 5 ft from the nearest end of the hose or swivel type piping connected to liquid transfer line,			3.2.19.4
		Manual shutoff feature provided at E SV installed location.			3.2.19.8
		Manual shutoff device provided at a remote location, not less than 25 ft., and not more than 100 ft. from the ESV.			3.2.19.8
		An ESV is installed on each leg of a multi leg piping each of which is connected to a hose or a swivel type connection on one side and to a header of 1½ inch in diameter or larger on the other side.			3.2.19.3 4.2.3.6(a)
		Breakaway stanchion is provided such that in any pull-away break will occur on the hose or swivel-type connection side while retaining intact the valves and piping on the plant side.			3.2.19.6
		Number of ESV's in liquid withdrawal service			

Note: If more than one ESV is installed in the facility, use one Form 5.6 for each ESV.

Form 5.7
Requirements for Vapor Transfer Lines 1¼-inch Diameter or Larger

A	B	C	D	E	F
Item #	**Appurtenance**	**Appurtenance Provided with the Feature**	**Installed in the facility?**		**NFPA 58 Section Reference (2001 edition)**
			Yes	**No**	
1	Emergency Shutoff Valve (ESV)	Installed within 20 ft. of lineal pipe form the nearest end of the hose or swivel-type connections.			3.2.19.2
		Automatic shutoff through thermal (fire) actuation with melting point of thermal element < 250 ^{o}F			3.2.19.4
		Temperature sensitive element installed within 5 ft from the nearest end of the hose or swivel type piping connected to liquid transfer line,			3.2.19.4
		Manual shutoff feature provided at E SV installed location.			3.2.19.8
		Manual shutoff device provided at a remote location, not less than 25 ft., and not more than 100 ft. from the ESV.			3.2.19.8
		An ESV is installed on each leg of a multi leg piping each of which is connected to a hose or a swivel type connection on one side and to a header of 1½ inch in diameter or larger on the other side.			3.2.19.3 4.2.3.6(a)
		Breakaway stanchion is provided such that in any pull-away break will occur on the hose or swivel-type connection side while retaining intact the valves and piping on the plant side.			3.2.19.6

If a checkmark is made in the "NO" column of any one of Form 5.5, Form 5.6 or Form 5.7, then these items must be addressed and brought into compliance with the specific edition of NFPA 58 that the facility was constructed to.

Form 5.8
Evaluation of Redundant and Fail-Safe Design

A	B		C	D	E	F
Item #	Description		Features	Installed in the facility? Yes	Installed in the facility? No	NFPA 58 Section Reference (2001 edition)
1	Container Sizes for which the appurtenances are provided		Redundant Fail-Safe equipment and Low Emission transfer lines are provided for each container of water capacity greater than 2,000 gal through 30,000 gal			3.11
2	LIQUID OR VAPOR WITHDRAWAL (1-1/4 in. or larger)		Internal Valve with integral excess flow valve or excess flow protection			3.11.3.1
			Positive Shutoff Valve installed as close as possible to the Internal Valve			3.11.3.2
3	LIQUID OR VAPOR INLET		Internal Valve with integral excess flow valve or excess flow protection or Back Flow Check valve			3.11.3.3
			Positive Shutoff Valve installed as close as possible to the Internal Valve or the back flow check valve			3.11.3.2
4	Railcar Transfer	Flow Into or Out of Railroad tank car	Internal Valve installed in the transfer hose or the swivel-type piping at the tank car end			4.2.3.6(a)
		Flow Only into railroad tank car	Internal valve or backflow check valve installed in the transfer hose or the swivel-type piping at the tank car end			4.2.3.6(b)
5	Cargo Tank Transfer		Protection provided in accordance with 3.2.19			3.2.19
6	Automatic closure of all primary valves (IV & ESV) in an Emergency		Actuated by Fire Detection			3.11.3.1
			Actuated by a hose pull-away due to vehicle motion			3.11.4.2
7	Manually operated remote shutdown of IV and ESV		Remote shutdown station within 15 ft of the point of transfer?			3.11.4.3(a)
			Another remote shutdown station between 25 ft and 100 ft of the transfer point?			3.11.4.3(b)
			Shutdown stations will shut down electrical power supply, if any, to the transfer equipment and primary valves?			3.11.4.3
			Signs complying with the requirements of 3.11.4.3 (c) provided?			3.11.4.3(c)

Note: If the facility does not have a rail terminal, write the word NA in both the "Yes" column and the "No" column in item 4 of this Form in the railroad tank car row. Similar option is also available if there is no cargo tank vehicle transfer station.

Form 5.9
Evaluation of Low Emission Transfer Equipment

A	B	C		D	E	F
Item #	**Description**	**Features**		**Installed in the facility?**		**NFPA 58 Section Reference**
				Yes	**No**	
1	Transfer into Cylinders or ASME Containers on Vehicles	Delivery Nozzle and Filler Valve- Max. Liquid Release after transfer of 4 cc.	Fixed Maximum Liquid Level Gage not used during transfer operations			3.11.5.1
2	Transfer into Stationary ASME Containers. Delivery valve and nozzle combination	Minimize the liquid product volume released to the atmosphere during product transfer or post transfer uncoupling of the hose	does not exceed 4 cc (0.24 in^3) from a hose of nominal size 1 in or smaller			3.11.5.1(a)
			does not exceed 15 cc (0.91 in^3) from a hose of nominal size larger than 1 in.			3.11.5.1(b)
3	Transfer into Stationary ASME Containers Maximum filling limit	Do containers of less than 2,001 gal (w.c.) have an overfilling prevention device or an other approved device?				3.11.5.2(c)
		Do containers of greater than 2,000 gal (w.c.) have a float gage or other non-venting device?				3.11.5.2(b)
4	Transfer into Stationary ASME Containers Fixed Maximum Liquid Level gage	Not used during routine transfer operations but used to calibrate other non-venting liquid level gages in the container				3.11.5.1(b)

Note: 1) If the facility does not have a particular feature described in the table, write "NA" in both the "Yes" and "No" columns corresponding its row in item 2.

Form 6.1
Evaluation of Physical Protection and Other Measures

A	B	C	D	E	F
#	Item	Features	Installed in the facility?		NFPA 58 Section Reference
			Yes	No	
1	Lighting‡	Provide lighting For nighttime operations to illuminate storage containers, container being loaded, control valves, and other equipment			3.3.7
2	Vehicle impact protection	Protection against vehicular (traffic) impacts on containers, transfer piping and other appurtenances is designed and provided commensurate with the size of vehicles and type of traffic in the facility. (Example protection systems include but not limited to (1) Guard rails, (2) Steel bollards or crash posts, (3) Raised sidewalks.			2.3.7.2 3.2.15.7
3	Protection against corrosion	Provide protection against corrosion where piping is in contact with supports or corrosion causing substances.			3.2.15.7
Complete only 4A or 4B					
4A	Perimeter Fence	Is an industrial type or chain link fence of at least 6 ft high or equivalent protection provided to enclose (all around) container appurtenances, pumping equipment, loading and unloading and container filling facilities?			3.3.6.1
		Are at least two means of emergency accesses (gates) from the enclosure provided? **NOTE: Write "N.A." (not applicable) if** (i) The area enclosed is less than 100 ft^2, or (ii) The point of transfer is within 3 ft of the gate, or containers are not filled within the enclosure			3.3.6.1 and associated Exception 1
		Is a clearance of, at least, 3 feet all around to allow emergency access to the required means of egress been provided?			3.3.6.1
	Guard Service	If a guard service is provided, does this service cover the LP-Gas plant and are the guard personnel provided with appropriate LP-Gas related training, per section 1.5 of NFPA 58?			3.3.6.1
4B	Lock-in-Place devices	Are Lock-in-Place devices provided to prevent unauthorized use or operation of any container appurtenance, system valves, equipment in lieu of the fence requirements above?			3.3.6.1 or 3.3.6.2

Fill only items 1, 2, 3, and 4A or 4B. Leave blank or indicate by "NA" when not filling the "YES" or "NO" column.

‡ Leave blank if the facility is not operated at night.

Form 6.2
Ignition Source Control Assessment

A	B	C	D	E
#	Ignition Control Requirement	Is the Facility compliant?		NFPA 58 Section Reference
		Yes	No	
1	Are combustible materials, weeds and tall grass not closer than 10 ft from each container?			3.2.2.6
2	Is distance at least 20 ft between containers and tanks containing flammable liquids with flash point less than 200 ^{o}F (ex., gasoline, diesel)			3.2.2.6
3	Are electrical equipment and wiring are installed per Code requirements?			3.7.2
4	Are open flame equipment located and used according to Code?			3.7.3
5	Are ignition control procedures and requirements during liquid transfer operations complied with.?			4.2.3.2
6	Is an approved, portable, dry chemical fire extinguisher of minimum capacity 18 Lbs and having a B:C rating provided in the facility?			3.10.2.4
7	Is an approved, portable, dry chemical fire extinguisher of minimum capacity 18 Lbs and having a B:C rating provided on each truck or trailer used to transport portable containers?			6.2.4
8	Is the prohibition on smoking within the facility premises strictly enforced?			4.2.3.2 & 6.3.10

Notes: 1) If there is no flammable or Class II combustible liquid storage in or nearby the facility insert "NA" in both "Yes" and "No" columns of row 2.

2) If there are no electrical equipment or there are no open flame equipment in the facility, then facility insert "NA" in both "Yes" and "No" columns corresponding to the appropriate rows.

Form 6.3

Separation Distances from containers to buildings, property line that can be built upon, inter-container distances, and aboveground flammable or combustible storage tanks

A	B	C	D	E	F	G
#	Container Size Range in gal (W.C.)	Separation Between A property line, important building or other property and the nearest container which is	Minimum Distance (ft)	Is the Facility compliant? Yes	Is the Facility compliant? No	NFPA 58 Section Reference
1	501 through 2,000	Above Ground	25			Table 3.2.2.2
		Underground or Mounded	10			
		Between containers	3			
2	2,001 through 30,000	Above Ground	50			
		Underground or Mounded	50			
		Between containers	5			
3	30,001 through 70,000	Above Ground	75			
		Underground or Mounded	50			
		Between containers	¼ sum of diameters of adjacent containers			
4	70,001 through 90,000	Above Ground	100			
		Underground or Mounded	50			
		Between containers	¼ sum of diameters of adjacent containers			
5	All sizes greater than 125 gal	Separation distance between a LP-Gas container and an above ground storage tank containing flammable or combustible liquids of flash points below 200 ^{o}F.	20			3.2.2.6 (e)

Note: If any of the container sizes indicated in the above form are not present in the facility, enter "NA" in both Yes and No columns. Do not count them for compliance with the code.

Form 6.4
Separation Distances between Points of Transfer and other Exposures

A	B		C	D	E	F	G
#	Type of Exposure within or outside the facility boundary		Check if exposure is present	Minimum Distance (ft)	Is the Facility compliant?		NFPA 58 Section Reference
					Yes	No	
1	Buildings, mobile homes, recreational vehicles, and modular homes with fire-resistive walls			10			Table 3.2.3.3
2	Buildings with other than fire resistive walls			25			
3	Building wall openings or pits at or below the level of the point of transfer			25			
4	Line of adjoining property that can be built upon			25			
5	Outdoor places of public assembly, including school yards, athletic fields, and playgrounds			50			
6	Public ways, including public streets, highways, thoroughfares, and sidewalks	From points of transfer in LP-Gas dispensing stations and at vehicle fuel dispensers.		10			
		From other points of transfer		25			
7	Driveways			5			
8	Mainline railroad track centerlines			25			
9	Containers other than those being filled			10			
10	Flammable and Class II combustible liquid dispensers and aboveground and underground containers			20			
11	Flammable and Class II combustible liquid dispensers and the fill connections of LPG containers			10			
12	LP-Gas dispensing device located close to a Class I liquid dispensing device.			10			3.9.4.3

NOTE: Place a checkmark in column C against an exposure that is present in or around the facility. Fill columns E or F for only those rows for which there is a checkmark in column C.

Form 6.5
Special Protection Measures – Requirements for Passive Systems

A	B	C	D		E
#	Special Protection Option	Question	Is the Facility compliant?		NFPA 58 Section Reference (2001)
			Yes	No	
1	Container Insulation	Insulation provided on each of the containers?			3.10.3.1
		Insulation material complies with the requirements of section 3.10.3.1 of NFPA 58?			3.10.3.1
2	Mounding of containers	Each container in the facility is mounded?			3.10.3.2
		Mounding complies with each requirement under section 3.2.9.3 of NFPA 58.			3.10.3.2
3	Burying of containers	Each container in the facility is buried?			3.10.3.3
		Buried containers comply with each requirement under section 3.2.9.1 of NFPA 58.			3.10.3.3 and 3.2.9.1

Form 6.6
Special Protection Measures – Requirements for Active Systems

#	Special Protection Option	Question	Is the Facility compliant?		NFPA 58 Section Reference (2001)
			Yes	No	
1	Water spray systems	Are fixed water spray systems, complying with NFPA 15[1] requirements, used for each container in the facility?			3.10.3.4
		Do fire responsive devices actuate water spray system automatically?			3.10.3.4
		Can the water spray systems be actuated manually also?			3.10.3.4
2	Monitor nozzle systems	Are the monitor nozzles located and arranged so that the water stream can wet the surfaces of all containers exposed to a fire?			3.10.3.5
		Can the water stream from a monitor nozzle reach and wet the entire surface of, at least, one half of a length from one end of each of the containers it is designed to protect?			3.10.3.5
		Do fixed monitor nozzles comply with NFPA 15[1] requirements?			3.10.3.5
		Do fire responsive devices actuate the monitor nozzles?			3.10.3.5
		Can the monitor nozzles can be actuated manually also?			3.10.3.5

1. Refer to Chapter 8 for a discussion on NFPA 15 *Standard for Water Spray Fixed Systems for Fire Protection*

Form 7.1
Types of Occupancies[1] Near or Surrounding the LP-Gas Facility

Type of Occupancies	Model from Table 7.1 (2)	Is an Occupancy located within the hazard distance from the Facility?	
		Yes	No
Assembly Occupancies (Places of worship, Libraries, Theaters and Auditoriums, Food or Drink Bars, Sports Stadiums, Amusement Parks, Transportation Centers, etc. with 50 or more people).			
Institutional Occupancies (Elderly Persons Home or Nursing Home, Hospitals, Alcohol & Drug Rehabilitation Centers, Prisons)			
Educational Occupancies (Elementary Schools, Day Care facilities, etc).			

NOTES: (1) See Glossary for the definitions of occupancies (Ref: NFPA 5000)

(2) Table 7.1 provides a number of scenarios that can result in propane release, and the resulting area exposed for different ignition mechanisms. Determine the scenarios that are applicable to the facility, for the quantities that can be released. Use the hose diameters and length that will be used at the facility if they differ from the ones in Table 7.1 and recalculate the hazard distances using a spreadsheet method that is available at npga.org. Some scenarios may not be applicable to an installation based on other mitigation measures taken, such as a hose management procedure to minimize the possibility of hose failure.

Form 7.2
Exposure to LP-Gas Facility from External Hazards

A	B	C	D
Item #	Type of Neighboring Operation	Hazard exist s to the LP-Gas Facility	
		YES	NO
1	Petroleum and other hazardous material storage, wholesale dispensing, etc.		
2	Metal cutting, welding , and metal fabrication		
3	Industrial Manufacturing that can pose external hazards		
4	Ports, rail yards and trans-shipment terminals handling flammable and explosive materials.		
5	Other operations that may pose hazards (Gasoline and other hazardous material dispensing stations, fertilizer storage, etc).		

NOTE: If a particular activity indicated in column B does not exist, fill both "YES" and "NO" columns with "N/A."

Where a "YES" has been checked in either Form 7.1 or Form 7.2:

1) For an existing facility, communicate this information to local emergency responders for inclusion in their emergency planning.
2) For a proposed facility, implement the actions indicated in Chapter 9.

Form 8.1
Data on the Responding Fire Department

A	B		C
Item #	**Data Item**		**Data Entry**
1	Name of the Fire Department (FD).		
2A	Name of the person in the FD assisting with the data acquisition.		
2B	Position of the person in the FD assisting with the data acquisition.		
3A	Date on which FD data was collected.		
3B	Name of the person collecting the data.		
4	Number of firefighters on duty at any time.		
5	Average number of firefighters available for response.		
6A	Number of firefighters qualified to	"Firefighter I" level.	
6B		"Firefighter II" level.	
7A	Number of firefighters who would	respond on the first alarm to the facility.	
7B		respond on the first alarm and who are qualified to the operations level requirements of NFPA 472 or local requirements	
7C		respond on the first alarm with specific knowledge and training on the properties of LP-Gas and LP-Gas fires.	
8A	Number of fire apparatus that have the capability to deploy a 125 gpm hose line supplied by onboard water for at least 4 minutes, and	that are in service in the department.	
8B		that would respond on a first alarm.	

Form 8.2

Response Time data for the Fire Departments

A	B	C	D	E
Company or Department	**Time in Minutes for**			
	Alarm Receipt & Handling	**Turnout**	**Travel**	**Total Time**

Note: Number in Column E = Sum of numbers from Columns B through D.

Form 8.3

Water Flow Rate and Total Water Volume Required to Cool Containers Exposed to a Fire

A	B	C	D	E	F	G	H
Item #	**ASME Container Size (gallons)**	**Total Surface Area of each Container[i] (ft^2)**	**Surface Area of each container to be Cooled (ft^2)**	**Water flow rate required per container (gpm)**	**Number of containers of the size indicated**	**Total Water flow rate required~ (gpm)**	**Total volume of water required for 10 min (gal)**
1	500	86	43	10.8			
	1,000	172	86	21.5			
	2,000	290	145	36.3			
	4,000	374	187	46.8			
	6,500	570	285	71.3			
	9,200	790	395	98.8			
	12,000	990	495	123.8			
	18,000	1,160	580	145.0			
	30,000	1,610	805	201.3			
	45,000	2,366	1,183	295.8			
	60,000	3,090	1,545	386.3			
	90,000	4,600	2,300	575.0			
	Other Size						
2a	Calculated water flow rate for container protection						
2b	Water flow rate rounded up to nearest multiple of 125						
3	Water for firefighter protection, if required					250	
4	Total water rate and volume						

Note: Column D = (1/2) x Column C Column E = 0.25 (gpm/ft^2) x Column D ;
Column G = Column F x Column E Column H = 10 x Column G
Line 2, Column G and Column H are the sum of numbers in each row above line 2 of each column.
Line 4, Column G and Column H are the sum of numbers in rows 2 and 3.
~ Consider only 3 containers for water supply evaluations even if the number of containers in a group is more than 3.

[i] ASME container dimensions obtained from www.standby.com/products/storage_tanks.html

Form 8.4
Evaluation of Water Availability in or Near the LP-Gas Facility

A	B	C	D		
Item #	**Water from**	**Available?**	**Quantitative information**		
1	Public supply or from another piped-in supply through one or more fire hydrants in or near the facility	☐ Yes ☐ No	Hydrant data	Distance from Facility gate (feet)	Available water flow rate from all hydrants[1] (gpm)
			Hydrant 1		
			Hydrant 2		
			Hydrant 3		
2	A nearby static water source (stream, pond, lake, etc).	☐ Yes ☐ No	Distance to water source = _____ Feet Time to set up relay = _____ min. Rate of delivery = _____ gpm		
3	Only through mobile water tanker shuttle.	☐ Yes ☐ No	Time to set up shuttle = _____ min. Sustainable flow rate = _____ gpm		

NOTE: (1) Obtain the flow rate in each hydrant from the local municipal water authority or the entity that supplies water to the hydrant or conduct a test to determine total available flow rate.

Form 9.1
Analysis Summary on Product Control and Local Conditions of Hazard

A	B	C	D	E
Item #	**CHAPTER Title**	**Section & Title**	**Reference FORM #**	**Number of "NO" checked§**
1	Product Control Measures in Containers & Transfer Piping	5.1: Product Control in Containers	5.1 or 5.2 or 5.3 or 5.4	
		5.2 Product Control in Transfer Piping	5.5	
			5.6	
			5.7	
			5.8	
			5.9	
2	Analysis of Local Conditions of Hazard	6.1 Physical Protection Measures	6.1	
		6.2 Ignition Source Control	6.2	
		6.3.1 Separation distances; Container and outside exposures	6.3	
		6.3.2 Separation distances; Transfer points and outside exposures	6.4	
		6.4 Special Protection Measures	6.5	
			6.6	

§ The number of "NO" for Forms from Chapter 5 are the difference between NFPA 58-2001 required number of appurtenances and a lesser number actually installed on the container or the transfer piping.

If in any row of column E ("NO") of Form 9.1, the entry number is greater than zero, the proposed LP-Gas facility is not in compliance with the 2001 NFPA 58 Code requirements for product control appurtenances or other safety measures. The design of the proposed facility must be modified to conform to the Code requirements. In addition, the following items should be noted.

- If there are any "NO" checks in Form 6.3, then the separation distance requirements for containers are not satisfied. An option that may be considered is the reduction in separation distance to 10 feet for underground and mounded containers by providing "Redundant and Fail-Safe Product Control Measures." In this case, complete Form 9.4, below to ensure that each requirement of "Redundant and Fail-Safe Product Control Measures" is provided.

- If there are any "NO" checks in Form 6.4, then the separation distance requirements for transfer points are not satisfied. In this case, relocate the transfer points so that the separation distances conform to the code requirements or provide the Low Emission Transfer Equipment. Complete Form 9.5 below and ensure that all requirements for Low Emission Transfer Equipment are fulfilled.

Form 9.2
Analysis Summary on Exposure from and to the LP-Gas Facility

A	B	C	D	E
Item #	**CHAPTER Title**	**Section & Title**	**Reference FORM #**	**Number of "YES" checked**
1	Exposure to and from Other Properties	7.1 Exposure to off-site properties and persons from in-plant propane releases	7.1	
		7.2 Exposure to propane facility from external events.	7.2	

If the entry number in column E ("YES"), Form 9.2 corresponding to Form 7.1 is greater than zero, consider one or more of the following design alternatives.

1 Consider moving the container or the transfer point to a different location, if possible and space exists, so that the property or the person is beyond the hazard distance.
2 Provide "Redundant and Fail-safe Product Control Measures". Complete Form 9.4 to ensure compliance.
3 Institute other technical measures such as installing gas and flame detectors (connected to facility shut down systems), sounding alarm outside facility premises, etc.
4 Institute administrative controls such as additional training for personnel, more frequent inspection of hoses and transfer piping, etc.

If the entry number in column E ("YES"), Form 9.2 corresponding to Form 7.2 is greater than zero, consider one or more of the following design alternatives.

1 Implement procedures to monitor neighboring activity.
2 Install means in the adjacent plant to shut down the LP-Gas plant in case emergency in that plant.

Form 9.3
Analysis Summary on Fire Department Evaluations

A	B	C	D	E	F
Item #	**CHAPTER Title**	**Section & Title**	**Reference FORM #**	**Number "zeros" entered in Lines 6 through 8**	**Number of "Yes" checked in Column C**
1	Fire department capability, adequacy of water supply and Emergency Planning	8.1 Data on the Fire Department	8.1		
2		8.2 Fire response water needs and availability	8.4		

If the entry number in Cell 1, Column E of Form 9.3 is greater than zero, consider one or more of the following design alternatives.

1 Discuss with the local Fire Department the needs of the LP-Gas facility and the evaluation results on the capability and training inadequacies of the Department.
2 Consider developing a cadre of personnel within the LP-Gas facility to respond to emergencies.
3 Institute container special protection system based on active protection approaches or passive approaches. Complete Form 9.6 and Form 9.7 below.

If the entry number in Cell 2, Column F of Form 9.3 is equal to zero, consider one or more of the following design alternatives.

1 Provide special protection (other than water spray or monitor systems) to containers, satisfying the requirements of section 3.10.3 of NFPA Code. Complete Form 9.6 to ensure compliance.
2 Consider implementing the various options indicated in Table 9.1.

Form 9.4
Redundant and Fail-Safe Design for Containers

A	B		C	D	E	F
Item #	**Description**		**Features**	**Proposed for the facility?**		**NFPA 58 Section Reference**
				Yes	**No**	
1	Container Sizes for which the appurtenances are provided		Redundant Fail-Safe equipment and Low Emission transfer lines are provided for each container of water capacity 2,001 gal to 30,000 gal			3.11
2	Liquid or Vapor Withdrawal (1-1/4 in. or larger)		Internal Valve with integral excess flow valve or excess flow protection			3.11.3.1
			Positive Shutoff Valve installed as close as possible to the Internal Valve			3.11.3.2
3	Liquid or Vapor Inlet		Internal Valve with integral excess flow valve or excess flow protection or Back Flow Check valve			3.11.3.3
			Positive Shutoff Valve installed as close as possible to the Internal Valve or the back flow check valve			3.11.3.2
4	Railcar Transfer	Flow Into or Out of Railroad tank car	Emergency Shutoff Valve installed in the transfer hose or the swivel-type piping at the tank car end.			4.2.3.6(a)
		Flow Only Into railroad tank car	Emergency shutoff valve or backflow check valve installed in the transfer hose or the swivel-type piping at the tank car end.			4.2.3.6(b)
5	Cargo Tank Transfer		Protection provided in accordance with 3.2.19			3.2.19
6	Automatic closure of all primary valves (IV & ESV) in an Emergency		By fire actuation			3.11.3.1
			In the event of a hose pull-away due to vehicle motion			3.11.4.2
7	Manually operated remote shutdown of IV and ESV		Remote shutdown station within 15 ft of the point of transfer?			3.11.4.3(a)
			Another remote shutdown station between 25 ft and 100 ft of the transfer point?			3.11.4.3(b)
			Shutdown stations will also turn off electrical power supply, if any, to the valves?			3.11.4.3
			Large letter signs complying with the requirements of 3.11.4.3 (c) provided?			3.11.4.3(c)

Note: If your facility does not have a rail terminal, write the word NA in both the "Yes" column and the "No" column in item 4 of the form in the railroad tank car row. Similar option is also available if there is no cargo tank vehicle transfer station.

Form 9.5
Low Emission Transfer Equipment

A	B	C		D	E	F
Item #	**Description**	**Features**		**Proposed for the facility?**		**NFPA 58 Section Reference**
				Yes	**No**	
1	Transfer into Cylinders or ASME Containers on Vehicles	Delivery Nozzle and Filer Valve-Max. Liquid Release after transfer of 4 cc.	Fixed Maximum Liquid Level Gauge not used during transfer operations			3.11.5.1
2	Transfer into Stationary ASME Containers Delivery valve and nozzle combination	During product transfer or post transfer uncoupling of the hose, liquid product volume released to the atmosphere	Does not exceed 4 cc (0.24 in^3) from a hose of nominal size 1 in or smaller			3.11.5.1(a)
			Does not exceed 15 cc (0.91 in^3) from a hose of nominal size larger than 1 in.			3.11.5.1(b)
3	Transfer into Stationary ASME Containers Maximum filling limit	For containers of size less than 2,001 gal (wc) overfilling prevention device or other approved device is provided.				3.11.5.2(c)
		For a container of capacity greater than 2,000 gal (wc) float gauge or other non-venting device is provided				3.11.5.2(b)
4	Transfer into Stationary ASME Containers Fixed Maximum Liquid Level gauge	Not used during routine transfer operations but may be used in calibrating other non-venting liquid level gauges in the container				3.11.5.1(b)

Note: If the facility does not have a particular feature described in the table, write "NA" in both the "Yes" and "No" columns corresponding its row in item 2.

Form 9.6
Special Protection Measures –Passive Systems

A	B	C	D		E
Item #	Special Protection Option	Question	Proposed for the facility?		NFPA 58 Section Reference
			Yes	No	
1	Insulation around the container	Insulation provided on each of the containers?			3.10.3.1
		Insulation material complies with the requirements of section 3.10.3.1 of NFPA 58?			3.10.3.1
2	Mounding of containers	Each container in the facility is mounded?			3.10.3.2
		Mounding complies with each requirement under section 3.2.9.3 of NFPA 58.			3.10.3.2
3	Burying of containers	Each container in the facility is buried?			3.10.3.3
		Buried containers comply with each requirement under section 3.2.9.1 of NFPA 58.			3.10.3.3 and 3.2.9.1

Form 9.7
Special Protection Measures –Active Systems

Item #	Special Protection Option	Question	Is the Facility compliant?		NFPA 58 Section Reference
			Yes	No	
1	Water spray systems	Are fixed water spray systems, complying with NFPA 15 requirements, used for each container in the facility?			3.10.3.4
		Do fire responsive devices actuate water spray system automatically?			3.10.3.4
		Can the water spray systems be actuated manually also?			3.10.3.4
2	Monitor nozzle systems	Are the monitor nozzles located and arranged so that the water stream can wet the surfaces of all containers exposed to a fire?			3.10.3.5
		Can the water stream from a monitor nozzle reach and wet the entire surface of, at least, one half of a length from one end of each of the containers it is designed to protect?			3.10.3.5
		Do fixed monitor nozzles comply with NFPA 15 requirements?			3.10.3.5
		Do fire responsive devices actuate the monitor nozzles?			3.10.3.5
		Can the monitor nozzles can be actuated manually also?			3.10.3.5

Equivalent Protection to a Water Supply for Bulk and Industrial Facilities

In the case where water supply is not available in or near the LP-Gas facility, or is inadequate or is prohibitively expensive to connect to a public or private water supply hydrant, alternative methods for providing protection should be considered. In lieu of providing a water supply, several alternatives are indicated in Table 9.1, which can offer an equivalency to a water supply system.

The intent of the controls identified in Table 9.1 is to maintain the entire system as a gas tight entity. These methods include reducing the service life of equipment, increasing the design pressure rating of the system beyond the requirements of NFPA 58, or providing early detection and isolation of the system to ensure product control. This list is not exhaustive and is not ranked in an order of priority.

Table 9.1

Equivalent Protection to a Water Supply for Industrial and Bulk Facilities

Item #	Possible options to implement when adequate water supply is not available
1	Reduce the service life of hoses
2	Increase frequency of equipment inspection
3	Establish a service life program for the maintenance of the container's pressure relief devices. This could include the installation of a listed multiple port valve and certifying that the relief devices are properly set and maintained every 5 to 10 years.
4	Increase the strength of the piping and fitting systems
5	Install emergency shutoff valves in conjunction with container internal valves
6	Install emergency shutoff valves downstream of transfer pump outlets, and upstream of the vapor and liquid valves at the bulkhead.
7	Install pneumatic tubing along the plant boundary to serve as a perimeter fire detection system. This would provide protection of the plant against exposure fires.
8	Provide optical flame detection or linear heat detection, or a gas detection system connected to an isolation valve installed downstream of every liquid and vapor nozzle on the container. This system could also be monitored to send a signal to an alarm company that notifies the Fire Department of an event.
9	Increase the separation distances of internal plant exposures to the container. These exposures would include a site dumpster, idle or waste pallets and combustibles, and increasing the parking distances between the bobtails and transports in relation to the container.
10	Relocate overhead power lines away from all container and cylinder storage area to protect against ignition in the event of a line dropping due to wind or power pole impact
11	Eliminate all combustible vegetation within 30 feet of the LP-Gas container. This can be accomplished using gravel, or paving the site yard.

1) For an existing facility, communicate this information to local responders for inclusion in their emergency planning.
2) For a proposed facility, refer to Chapter 9.

TABLE B-1
LPG Release Models [1] for Hazard Assessment
Recommended for use in the FSA Manual by authors

Aggregate Storage	Release Model	Details	Hose ID	Hose Length	Instantaneously Released Propane Total Quantity		Flashed Vapor+ Aerosol[2]	Continuously Released Propane				Total Mass Released	Assumed to be in Vapor + aerosol phase	Assumed to be in liquid[3] phase on ground
								Time	Rate	Rate	Flashed Vapor + Aerosol[2]			
Gal.	#		(in)	(ft)	gal	Lb.	Lb[3]	Min.	gpm	lb/ min	Lbs/ min	Lb	Lb	Lb
4,001 to 8,000	1	Bobtail hose failure,	1.0	150.0	6.1	25.1	17.5	NA	NA	NA	NA	25.1	17.5	7.6
	2	Transfer piping 1" x 30 ft + 20 gpm, 10 min.	1.0	30.0	1.2	5.0	3.5	10.0	20.0	82.1	57.2	825.8	576.0	249.9
	3	PRV release @ 275 psig, 30 sec.	----	----	----	----	----	0.5	----	1,021.0	----	510.5	510.5	----
8,001 to 18,000	4	Bobtail hose failure	1.0	150.0	6.1	25.1	17.5	NA	NA	NA	NA	25.1	17.5	7.6
	5	1 in x 150 ft transfer piping to a vaporizer + partial flow from an excess flow valve @ 20 gpm for 10 mins	1.0	150.0	6.1	25.1	17.5	10.0	20.0	82.1	57.2	845.9	590.0	256.0
	6	Leak from a 1/4 inch dia pipe corrosion hole, 60 min	0.25	0.0	0.0	0.0	0.0	60.0	18.8	77.2	53.8	4,629.0	3,228.3	1,400.7
	7	PRV release at 12,390 scfm air, one hour						60.0	----	1,240.2		74,413.5	74,413.5	
> 18,000	8	2 inch transfer hose, 20 ft. long	2.0	20.0	3.3	13.7	9.6	NA	NA	NA	NA	13.7	9.6	4.2
	9	Transport Hose Blowdown: Hose size 2" dia, 20 ft length x 3min after the tank is filled.	2.0	20.0	0.0	0.0	0.0	3.0	1.1	4.5	3.1	13.5	9.4	4.1
	10	PRV release at 12,390 scfm air for one hour						60.0	----	1,240.2		74,413.5	74,413.5	

Notes to Table B-1:

1. Assumes that storage temperature is 80° F for all containers. The pressure in the container is the saturation pressure of LPG at 80° F, which is 130 psig.

2. The mass of aerosol in a vapor+aerosol cloud is assumed to be one half of the liquid mass formed after flashing. The mass of vapor+aerosol is X + (1-X)*0.5, where X is the mass fraction of aerosol formed by the flashing process.

3. Instantaneously released mass of liquid released after the flash process

4. The volume flow rate of propane through the PRV is proportional to the inverse square root of the propane vapor density, assuming that the pressure drop and the orifice size are equal. Hence to convert from air flow SCFM to propane flow SCFM, multiply air flow SCFM by sqrt (1/1.46). Also, the velocity of gases exiting the PRV is calculated assuming a 2 inch diameter at the exit section.

5. Pressure relief valve discharge is based on a 1 1/16 in. lift in a 1.75 in. diameter valve seat. Rated at 12,200 SCFM air[4]

TABLE B-2
Distances to LFL Concentrations and Hazard Areas

Model #	Details	Puff Type Dispersion[1]				Plume Type Dispersion				Explosion[2] Hazard Distance	Fire Ball[4] Dist.
		Maximum Downwind Travel Distance	Maximum Radius of LFL Concn. Contour	Downwind Distance to Maximum LFL Radius	Max Ground Hazard Area	Maximum Values for Downwind Travel Distance	Cross-wind width	Down - wind Distance to Max. Width	Ground Hazard Area[5].		
		ft	ft	ft	ft^2	ft	ft	ft	ft^2	ft	ft
1	Bobtail hose failure.	251	10.4	147.6	342	----	----	----	----	111	53
2	Transfer piping 1" x 30 ft + 20 gpm for 10 min.	135	5.8	78.7	107	115	8	66	475	120	26
3	PRV release 275 psig for 30 sec. 1/16 in lift x 1.75 in ID seat (Rated flow 10200 SCFM air).	----	----	----	----	----	----	----	----	----	----
4	Bobtail hose failure	251	10.4	147.6	342	----	----	----	----	111	53
5	1 in x 150 ft length transfer piping to a vaporizer + reduced flow from a partially open excess flow valve at 20 gpm for 10 mins	251	10.4	147.6	342	115	8	66	475	120	53
6	Leak from a 1/4 inch dia corrosion hole in a pipe: 60 min at a pressure corresponding to 80 ^{o}F (130 psig)[6]	----	----	----	----	112	8	75	439	117	4
7	PRV release at 12,390 scfm air for one hour	----	----	----	----	----	----	----	----	----	----
8	2 inch dia transfer hose x 20 ft. long failure.	194	8.3	114.8	218	----	----	----	----	91	41
9	Transport Hose Blowdown: 2" dia Hose, 20 ft long x 3min from a Transport after tank filling.	----	----	----	----	26	8	75	103	28	2
10	PRV release at 12,390 scfm air for one hour	----	----	----	----	----	----	----	----	----	----

NOTES to Table B-2

1. DISPERSION OF VAPORS: Assumes that the flashed vapor+ aerosol together disperse as a heavy gas in "F" stability weather at a wind speed of 1.5 m/s (3.4 mph). If a puff of vapor is released followed by a long duration (at least 5 minute spill time) release then the dispersion hazard is calculated both using the puff calculations and the continuous plume calculations.

2. **VAPOR EXPLOSION:** Assumed hazard criterion is 1 psi overpressure (Ref: eqn C-1, Offsite Consequence Analysis Guidance, EPA 1999).

If the release occurs instantaneously (as a puff of vapor + aerosols) the mass that is used for the explosion hazard calculation is the total mass of flashed vapor + entrained liquid aerosols. If the release occurs over a longer period of time (continuous) release then the mass of vapor that can participate in a vapor cloud explosion is the mass of vapor + entrained aerosol released over the duration of time taken for the vapor concentration to decrease from 100% to LFL in the dispersing plume. This time is equal to the maximum downwind LFL distance divided by the wind speed.

3. **RADIATION FROM POOL FIRE**: Pool depth is assumed to be 0.5 cm for instantneously released liquid. Also, it is assumed that all liquid formed after the flash forms a pool. In the case of continuous release the pool diameter is determined by a balance between evaporation due to fire and the full spill rate without consideration of the flashing. The evaporation rate for relatively small pool fires is given by the formula: liquid regression rate(cm/min) = 0.0076*(lower heat of combustion/latent heat of evaporation)

[Reference: Burgess, D. and M. Hertzberg, "Radiation from Pool Flames," Heat Transfer in Flames (Ed: Afghan and Beer), Scripta Book Co, Washington, DC, 1974.

Radiation effect is calculated using equation 10-1 of Offsite Consequence Analysis Guidance, EPA 1999.

The thermal radiation hazard is based on a radiant intensity of 5 kW/m^2.

4. **FIRE BALL**: The hazard distance is approximately proportional to the square root of mass of propane released. Table 30 of Offsite Consequence Analysis Guidance, EPA 1999.indicates that for 1000 lb propane release the distance is about 264 ft. The results in OCAG (Table 30) is correlated as Hence X (ft) = 12.83 * $(M \text{ in Lbs})^{0.441}$

The mass used is the total release in case of instantaneous release. In the case of continuous release the total mass is the mass released first instantaneously + the continuous release over the period of time equal to the dispersion time to LFL of the plume.

5. Hazard area for plume dispersion is calculated as the sum of two triangular areas. The first triangle is from origin to the maximum LFL. The second triangle is from maximum LFL width location to maximum downwind distance.

6. The hazard distances to explosion and from the fireball are calculated using the mass of vapor (of concentration above LFL) that is in the dispersion plume. This is equal to the release rate and the duration of the time it takes for the plume to reach the LFL downwind distance at the specified wind speed. (= 92 ft/(3 m/s wind) * 78.1 lbs/min = 29.14702)

TABLE B-3
Various Parameters and their Values Used in the Models

Parameter Description	Value	Unit	Reference
			#
Pi = Circumference to diameter ratio of a circle	3.141593		
Coefficient of discharge for a hole in transfer piping	0.62		(1)
Wind speed for F stability weather	1.5	m/s	
Burning rate of an LPG liquid pool	0.890026	cm/min	(2)
	0.0292	ft/min	
Release Rate from a 1/4 inch corrosion hole	18.79816	gpm	
	2.512788	ft^3/min	
Area of liquid pool	86.0534	ft^2	
Diameter of pool fire (fire on the liquid pool)	10.46741	ft	
Distance (X) to a thermal radiation level of 5 kW/m^2 (For this radiation level from an LPG pool fire with 40% efficiency of radiation the X/d ratio is 4.71)	49.30148	ft	

Reference (1) p 5-13, Fig 5-18, Chemical Engineers' Handbook, 5th edition, 1973.
Reference (2) p417, "Radiation from Pool Fires", Burgess & Hertzberg, Heat Transfer in Flames, (Editors) Afghan & Beer, Scriptya Book Co. Washington DC 1974

TABLE B-4
Thermodynamic Properties of Propane

Property Item	SI Units			Conventional Units		
	Pure Propane	Commercial Propane	Units	Pure Propane	Commercial Propane	Units
Chemical Formula	$CH_2 (CH_3)_2$			$CH_2 (CH_3)_2$		
Molecular weight	44.097		kg/k mole	44.097		lb/lb mole
Critical Pressure	1,422.12		kN/m^2	206.26		psia
Critical Temperature	598.56		K	617.4		^oF
Vapor pressures at various temperatures						
50 ^oF	635.6		kN/m^2	92.2		psia
60 ^oF	741.4		kN/m^2	107.5		psia
70 ^oF	859.6		kN/m^2	124.7	145.0	psia
80 ^oF	991.3		kN/m^2	143.8		psia
90 ^oF	1,137.0		kN/m^2	164.9		psia
100 ^oF	1,297.9		kN/m^2	188.3	218.0	psia
110 ^oF	1,475.1		kN/m^2	213.9		psia
120 ^oF	1,669.3		kN/m^2	242.1		psia
Boiling Temperature at atm pressure (NBT)	231.3		K	-43.73	-44	^oF
Freezing Temperature	85.7		K	-305.8		^oF
Density of Liquid at NBT (saturated cond)	582.5		kg/m^3	36.36		lb/ft^3
Density of Liquid at 60 ^oF	503.8		kg/m^3	31.45	31.45	lb/ft^3
				4.20	4.20	lb/gal
Density of Liquid at 80 ^oF	491.8		kg/m^3	30.70		lb/ft^3
				4.10		

Property Item	SI Units			Conventional Units		
	Pure Propane	Commercial Propane	Units	Pure Propane	Commercial Propane	Units
Density of saturated vapor at NBT	2.432		kg/m^3	0.15181		lb/ft^3
Density of vapor at 60 ^oF (@ 1 atm pressure)	1.937		kg/m^3	0.1210	0.1155	lb/ft^3
Vapor specific density at STP (1 atm & 68 ^oF) w.r.t. air	1.46			1.46		
Specific heat of liquid @ 60 ^oF	2,637.2		J/kg K	0.63	0.63	Btu/lb ^oF
Specific heat ratio of vapor (C_p/C_v)	1.14			1.14		
Heat of Vaporization @ NBT	427.98		kJ/kg	184		Btu/lb
Heat of Combustion (lower heat)	46.30		MJ/kg	19905.5		Btu/lb
Heat of Combustion (higher heat)	50.12		MJ/kg	21548		Btu/lb
Lower Flammability Limit %	2.15		%	2.15		---
Upper Flammability Limit %	9.6			9.6		
Liquid Enthalpy @ saturated at indicated Temp (Enthalpy is 0 @ -40 ^oF)						
-44 ^oF	-4.75		kJ/kg	-2.04		Btu/lb
60 ^oF	134.85		kJ/kg	57.976		Btu/lb
70 ^oF	149.40		kJ/kg	64.232		Btu/lb
80 ^oF	164.23		kJ/kg	70.605		Btu/lb
90 ^oF	179.36		kJ/kg	77.11		Btu/lb
100 ^oF	194.83		kJ/kg	83.763		Btu/lb
110 ^oF	210.70		kJ/kg	90.584		Btu/lb
120 ^oF	227.01		kJ/kg	97.597		Btu/lb

TABLE B-5
Calculation of the Mass Fraction of LPG and n-Butane, which Flashes to Vapor When Released from Pressurized Storage

Release from a Storage Temperature Of °F	% Mass of released liquid which flashes to vapor directly	
	Propane	n Butane
60	32.6	9.0
70	36.0	12.3
80	39.5	15.5
90	43.0	18.9
100	46.6	24.2
110	50.3	26.0
120	54.2	29.6

Appendix C

Table C-1

Propane Property Values Used in FSA Calculations

Property Item		SI Units		Conventional Units	
		Value	Units	Value	Units
Chemical Formula		$CH_2 (CH_3)_2$		$CH_2 (CH_3)_2$	
Molecular weight		44.097	kg/kmole	44.097	lb/lbmole
Critical Pressure		1,422.12	kN/m^2	206.26	psia
Critical Temperature		598.56	K	617.4	^oF
Saturated Vapor Pressure @	50 ^oF	635.6	kN/m^2	92.2	psia
	60 ^oF	741.4	kN/m^2	107.5	psia
	70 ^oF	859.6	kN/m^2	124.7	psia
	80 ^oF	991.3	kN/m^2	143.8	psia
	90 ^oF	1,137.0	kN/m^2	164.9	psia
	100 ^oF	1,297.9	kN/m^2	188.3	psia
	110 ^oF	1,475.1	kN/m^2	213.9	psia
	120 ^oF	1,669.3	kN/m^2	242.1	psia
Boiling Temperature at atm pressure (NBT)		231.3	K	-43.73	^oF
Freezing Temperature		85.7	K	-305.8	^oF
Density of Liquid at NBT (saturated cond)		582.5	kg/m^3	36.36	lb/ft^3
Density of Liquid at 60 ^oF		503.8	kg/m^3	31.45	lb/ft^3
				4.20	lb/gal
Density of Liquid at 80 ^oF		491.8	kg/m^3	30.70	lb/ft^3
				4.10	lb/gal
Density of saturated vapor at NBT		2.432	kg/m^3	0.15181	lb/ft^3
Density of vapor at 60 ^oF (@ 1 atm pressure)		1.937	kg/m^3	0.1210	lb/ft^3
Vapor specific density at STP (1 atm & 68 ^oF) w.r.t. air		1.46		1.46	
Specific heat of liquid @ 60 ^oF		2,637.2	J/kg K	0.63	Btu/lb ^oF
Specific heat ratio of vapor (C_p/C_v)		1.14		1.14	
Heat of Vaporization @ NBT		427.98	kJ/kg	184	Btu/lb
Heat of Combustion (lower heat)		46.30	MJ/kg	19905.5	Btu/lb
Heat of Combustion (higher heat)		50.12	MJ/kg	21548	Btu/lb
Lower Flammability Limit %		2.15	%	2.15	---
Upper Flammability Limit %		9.6		9.6	
Saturated Liquid Enthalpy @	-44 ^oF	-4.75	kJ/kg	-2.04	Btu/lb
(Enthalpy is 0 @ -40 ^oF)	60 ^oF	134.85	kJ/kg	57.976	Btu/lb
	70 ^oF	149.40	kJ/kg	64.232	Btu/lb
	80 ^oF	164.23	kJ/kg	70.605	Btu/lb
	90 ^oF	179.36	kJ/kg	77.11	Btu/lb
	100 ^oF	194.83	kJ/kg	83.763	Btu/lb
	110 ^oF	210.70	kJ/kg	90.584	Btu/lb
	120 ^oF	227.01	kJ/kg	97.597	Btu/lb